ORDER NO. FTD950605315

Service Manual

Multi-Scan Color CRT Display
MODEL TX-D1733 Series
Chassis No. HV5
Chassis Family No.17HV5

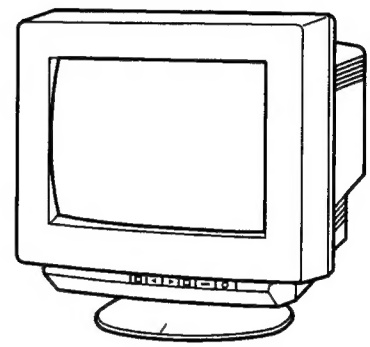

CONTENTS

SERVICE WARNING 1
SAFETY PRECAUTIONS 2
GENERAL INFORMATION 3
SPECIFICATIONS 3
DIMENSIONS 13
DISASSEMBLY INSTRUCTIONS 15
CONTROL LOCATION 18
CAUTION FOR ADJUSTMENT AND REPAIR 19
CAUTION FOR SERVICING 19
ADJUSTMENT AND CHECK PROCEDURE 20
ADJUSTMENT SOFTWARE 22
ADJUSTMENT CONTROL LOCATION 23
REQUIRED ADJUSTMENT PROCEDURE AFTER A PARTS REPLACED 24
ADJUSTMENT PROCEDURE 25
BLOCK DIAGRAM 39
CONDUCTOR VIEW 46
SCHEMATIC DIAGRAM 49
TROUBLE SHOOTING HINTS 59
EXPLODED VIEW 65
REPLACEMENT PARTS LIST 66

Panasonic

© 1995 Matsushita Electric Co., Ltd.
All right reserved. Unauthorized copying and distribution is a violation of law.

⚠ WARNING

This service information is designed for experienced repair technicians only and is not designed for use by the general public.

It does not contain warnings or cautions to advise non-technical individuals of potential dangers in attempting to service a product.

Products powered by electricity should be serviced or repaired only by experienced professional technicians.

Any attempt to service or repair the product or products dealt within this service information by anyone else could result in serious injury or death.

SAFETY PRECAUTIONS

1 CAUTION:

No modification of any circuit should be attempted. Service work should only be performed after you are thoroughly familiar with all of the following safety checks and servicing guide lines.

2 SAFETY CHECK

Care should be taken while servicing this CRT display because of the high voltage used in the deflection circuits. These voltages are exposed in such areas as the associated flyback and yoke circuits.

3 FIRE & SHOCK HAZARD

3-1 Insert an isolation transformer between the CRT display and AC power line before servicing the chassis.

3-2 In servicing pay attention to original lead dress especially in the high voltage circuit. If a short circuit is found, replace all parts which have been overheated as a result of the short circuit.

3-3 All the protective devices must be reinstalled per original design.

3-4 Soldering must be inspected for possible cold solder joints, frayed leads, damaged insulation, solder splashes or sharp solder points. Be certain to remove all foreign material.

4 LEAKAGE CURRENT COLD CHECK

4-1 Unplug the AC cord and connect a jumper between the two prongs on the plug.

4-2 Turn the CRT display power switch "on" .

4-3 Measure the resistance value with an ohmmeter between the jumpered AC plug and each exposed metallic part on the CRT display such as the metal frame, screwheads, control shafts, etc. When the exposed metallic part has a return path to the chassis, the reading should be 1.8 megohm minimum.

5 LEAKAGE CURRENT HOT CHECK

5-1 Plug the AC cord directly into the AC outlet. Do not use an isolation transformer during this check.

5-2 Connect a 1500 ohm, 10 watt resistor, paralleled by a 0.15μF capacitor between each exposed metallic part and a good earth ground (as shown in Fig.1).

5-3 Use an AC voltmeter with 1000 ohm/volt or more sensitivity and measure the AC voltage across the combination 1500 ohm resistor and 0.15μF capacitor.

5-4 Move the resistor connection to each exposed metallic part and measure the voltage.

5-5 Reverse the polarity of the AC plug in the AC outlet and repeat the above measurement.

5-6 Voltage measured must not exceed 7.5 volt RMS, from any exposed metallic part to ground A leakage current tester may be used in the above hot check, in which case any current measured must not exceed 5.0 milliamp. In the case of a measurement exceeding the 5.0 milliamp value, a rework is required to eliminate the chance of a shock hazard.

Note: High voltage is present when this CRT display is operating. Always discharge the anode of the picture tube to the display chassis to prevent shock hazard.

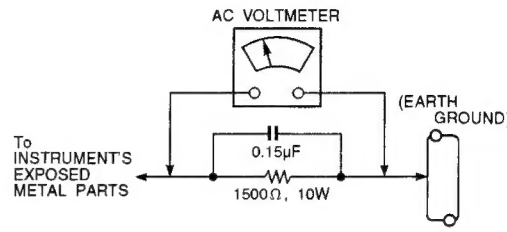

Fig.1

6 IMPLOSION PROTECTION

Picture tubes are equipped with an integral implosion protection system, but care should be taken to avoid damage and scratching during installation. Use only Panasonic replacement picture tubes.

7 X-RADIATION

WARNING : The only potential source of X-Radiation is the picture tube. However when the high voltage circuitry is operating properly there is no possibility of X-Radiation problem. The basic precaution which must be exercised is to keep the high voltage at the following factory-recommended level.

Note: It is important to use an accurate periodically calibrated high voltage meter.

7-1 The procedure for adjustment high voltage is as shown on page 27.

7-2 If can not be adjust 25.0 kV at immediate service is required to prevent the possibility of premature component failure.

7-3 To prevent X-Radiation possibility it is essential to use the specified picture tube.

IMPORTANT SAFETY NOTICE

There are special components used in this CRT displays which are important for safety. These parts are identified by the international symbol ⚠ on the schematic diagram and on the replacement parts list. It is essential that these critical parts should be replaced with manufacture's specified parts to prevent X-RADIATION, shock, fire or other hazards. Do not modify the original design or this will void the original parts and labor guarantee.

GENERAL INFORMATION

1. OUTLINE

TX-D1733 is a 17 inch multi-scan color CRT display with the following features.

•Multi scan •Digital control •OSD (On Screen Display) control •Power saving •High contrast and fine dot pitch CRT

2. FEATURES

2-1 Power Saving

- This monitor is equipped with power management circuitry conforming to the VESA standard.
- Depending on the signal from a computer, switching occurs between four modes to minimize non-essential energy consumption.

2-2 OSD (on screen display) function

- OSD (5 languages) is a man-machine interface. Any one is able to set up the picture as he like through OSD menu.

2-3 Self Test function

- With a touch of a button ([1]) the self-test function quickly identifies a "no signal condition." This time saving function simplifies diagnostics and prevents unnecessary service calls.

2-4 Power Supply with high power factor

- Power Supply with high power factor enables to utilize AC power efficiently meeting IEC555-2 (Line Harmonics).

2-5 Ergonomic design

- Low emission design to meet MPR II
- ESF (Electro static field) free coating on CRT

2-6 Multi scan with digital technology

- 8 bit micro computer controls the circuit operation to meet with wide range signal of f_H=30~69 kHz and f_V=50~160 Hz. So VGA640x350, VGA640x400, VGA640x480, SVGA800x600, 1024x768 and 1280x1024 mode are applicable.

2-7 3 Factory presets, (+5 Reservation), 13 user memories.

- 3 standard modes are preset at the factory.
- 5 modes are reserved at the factory.
- 13 user memories are available to set the users own timing and display information.

2-8 Flat Face and fine dot pitch

- Flat face CRT with a fine dot pitch of 0.27 mm provides for comfortable viewing.

2-9 Superior display performance

- Good focus by sophisticated gun and dynamic focus circuit
- High contrast CRT (TM=42.5%)
- Minimized distortion by correction circuit
- Good convergence
- Full scan image for graphics

2-10 Plug and Play

- VESA/DDC1 (Display Data Channel) compatible

SPECIFICATION

1. DIAGRAM

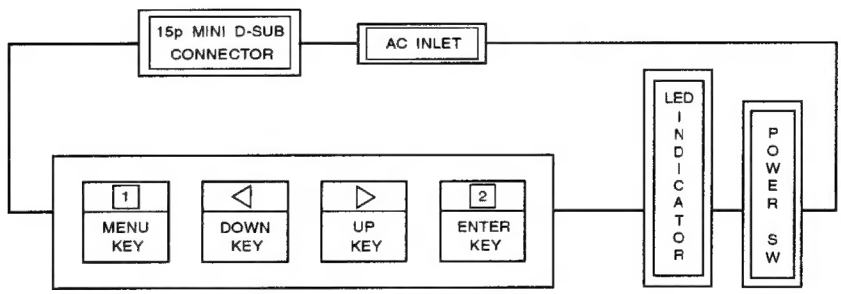

1.1 POWER SW, LED, [1]-key (MENU), ◁-key (DOWN), ▷-key (UP), and [2]-key (ENTER) are located on the front panel.

1.2 Signal connector and AC inlet are located on the back side of the cabinet.

1.3 OSD menu includes the following function.

CONTRAST	BRIGHTNESS	DEGAUSS
H POSITION	H SIZE	V POSITION
V SIZE	V PIN-CUSHION	TRAPEZOID
PARALLELOGRAM	COLOR SELECT	
DISPLAY FREQUENCY	VIDEO INPUT LEVEL	
LANGUAGES	RECALL.	

※) CONTRAST can be directly controlled with ◁/▷-key.

※) With sync signal, OSD menu appears by pushing [1]-key.
Without sync signal, self test menu appears by pushing [1]-key.

2. MECHANICAL SPECIFICATIONS

..... refer to the attached drawing

2.1 Dimension Height : 415 mm (16.3") typ.
Width : 410 mm (16.1") typ.
Depth : 438 mm (17.2") typ.

2.2 Net Weight : 17.0 kg (37.4 lbs) typ.

3. CONNECTORS

3.1 Signal connector: 15P Mini D-Sub connector
3.2 AC inlet: CEE 22 typed connector

<15P Mini D-Sub Pin assignment>

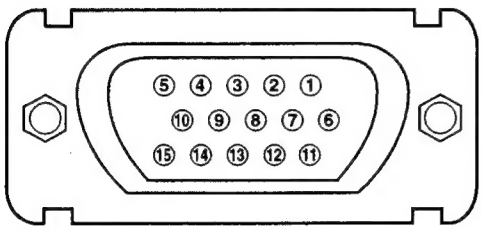

1 ... RED	6 ... GROUND	11 ... GROUND
2 ... GREEN	7 ... GROUND	12 ... SDA (DDC)
3 ... BLUE	8 ... GROUND	13 ... H. SYNC.
4 ... GROUND	9 ... – (OPEN)	14 ... V. SYNC.
5 ... GROUND (DDC)	10 ... GROUND	15 ... SCL (DDC)

4. CRT SPECIFICATIONS

Part No.	M41KXH140X
Type	17", 90°, 29ø, in-line gun (15.7" Viewable)
Dot Pitch	0.27 mm
Phosphor	R, G, B Short Persistence (Hi-Eu RED)
CIE Color point	Red x: 0.635 (± 0.020) y: 0.333 (± 0.020) Green x: 0.280 (± 0.020) y: 0.595 (± 0.020) Blue x: 0.152 (± 0.015) y: 0.063 (± 0.015)
Bulb	DARK TINT
Face	NEW AGRAS COAT
Total Transmission	42.5 %

5. ELECTRICAL SPECIFICATIONS

5.1 Standard conditions ... Except special items

Display image	Green, full "H" characters with a border line. (7 x 9 dots) Video siganl : 100% duty Display area : 300 mm x 225 mm
Video signal level	0.7 Vpp
Contrast, Brightness	Contrast : Max., Brightness : detent point
Ambient Temperature	20±5°C (68 ± 9°F)
Input Voltage	AC 120 V, 60 Hz
Terrestrial magnetism	Vertival field : northern hemisphere field (40μT) Horizontal field : no field
Viewing direction	Parallel to the CRT axis
Measurements	After an initial warming up time of more than 30 minutes.
Ambient light	200±50 IX
Display mode	1024 x 768 (60.02 kHz, 75.03 Hz)

5.2 POWER

5.2.1 Power supply ... Commercial power source

Input voltage	AC 90 - 132 V, AC 198 - 264 V
Power frequency	50/60 Hz
Input current	1.5 A Max. (100V) (※1)
Inrush current (at 20° C)	40 A op
Power consumption	100 W (Typ.)

(※1) Input current is reduced to about 60 % our current products by "High Power Factor" technology.

5.2.2 Power Management for Power Saving ...

Power saving system is designed based upon VESA DPMS standard (Version : 1.0)

1) Power consumption and recovery time.

*1 APM State	SIGNALS			MONITOR POWER CONSUMP-TION	RECOVERY TIME TO ON STATE	INDICATOR
	H. Sync	V. Sync	VIDEO			
ON	*3 NOR-MAL	*3 NOR-MAL	*2 ACTIVE	*4 100%	—	Green
STAND-BY	No Sync or *5 < 6 kHz	> 40 Hz	BLANK	< 30 W	< 4s	Yellow
SUS-PEND	>10 kHz	No Sync or *5 < 20 Hz	BLANK	< 30 W	< 4s	Yellow
OFF	No Sync or *5 < 6 kHz	No Sync or *5 < 20 Hz	BLANK	< 8 W	< 20s	Yellow

** The transition time from ON state to each APM state is 5 seconds minimum.

*1 : APM : Advanced Power Management.

*2 : Meas. Condition of power consumption for ON state.
DISPLAY IMAGE : WHITE full "H" characters with a border line (7 × 9 dots).

*3 : NORMAL : See "7.4 ACCEPTABLE TIMING".

*4 : Power Consumption is measured at AC 100-240V.

*5 : Power saving operation is done at least less than specified value in the list.

5.3 Standard timing (Standard mode)

- Following total 3 modes (5 modes) are preset (reserved) in the memory as standard timing at the factory.
- Fig-1 shows a definition of timing and signal level.
- Electrical performance is specified This SPECIFICATION is specified at STD (1024 x 768) mode unless otherwise mentioned. (MODE-2)

TIMING CHART

A	Period
B	Blanking
C	Sync Width
D	Back Porch
E	Active
F	Front Potch

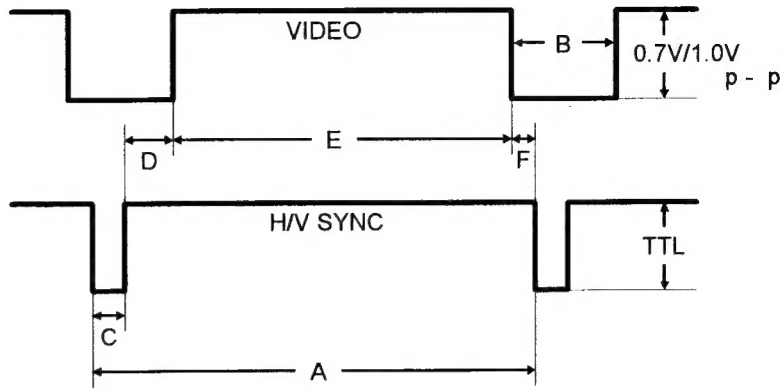

Fig.2

FOR PRESET

		MODE - 1	MODE - 2	MODE - 3
		640 × 480 (60)	1024 × 768 (75)	1280 × 1024 (60)
	DOT CLOCK	25.1745 MHz	78.7500 MHz	109.4695 MHz
H	f H	31.4681 KHz	60.0229 KHz	63.7192 KHz
H	A - PERIOD	31.778 µs (800 dots)	16.660 µs (1,312 dots)	15.694 µs (1,718 dots)
H	B - BLANKING TIME	6.356 µs (160 dots)	3.657 µs (288 dots)	4.001 µs (438 dots)
H	C - SYNC WIDTH	3.813 µs (96 dots)	1.219 µs (96 dots)	1.425 µs (156 dots)
H	D - BACK PORCH	1.907 µs (48 dots)	2.235 µs (176 dots)	2.174 µs (238 dots)
H	E - ACTIVE TIME	25.423 µs (640 dots)	13.003 µs (1,024 dots)	11.693 µs (1,280 dots)
H	F - FRONT PORCH	0.636 µs (16 dots)	0.203 µs (16 dots)	0.402 µs (44 dots)
V	f V	59.9393 Hz	75.0286 Hz	59.9992 Hz
V	A - PERIOD	16.684 ms (525 lines)	13.328 ms (800 lines)	16.667 ms (1,062 lines)
V	B - BLANKING TIME	1.430 ms (45 lines)	0.533 ms (32 lines)	0.596 ms (38 lines)
V	C - SYNC WIDTH	0.064 ms (2 lines)	0.050 ms (3 lines)	0.047 ms (3 lines)
V	D - BACK PORCH	1.049 ms (33 lines)	0.466 ms (28 lines)	0.502 ms (32 lines)
V	E - ACTIVE TIME	15.254 ms (480 lines)	12.795 ms (768 lines)	16.071 ms (1,024 lines)
V	F - FRONT PORCH	0.318 ms (10 lines)	0.017 ms (1 lines)	0.047 ms (3 lines)
	SYNC POLARITY(H/V)	Negative / Negative	Positive / Positive	Sync on green

FOR RESERVATION

		MODE - 4	MODE - 5	MODE - 6
		640 × 480 (75)	800 × 600 (75)	MAC-II (832 × 624)
	DOT CLOCK	31.5000 MHz	49.5000 MHz	57.2830 MHz
H	f H	37.5000 KHz	46.8750 KHz	49.7248 KHz
H	A - PERIOD	26.667 µs (840 dots)	21.333 µs (1,056 dots)	20.111 µs (1,152 dots)
H	B - BLANKING TIME	6.349 µs (200 dots)	5.172 µs (256 dots)	5.586 µs (320 dots)
H	C - SYNC WIDTH	2.032 µs (64 dots)	1.616 µs (80 dots)	1.117 µs (64 dots)
H	D - BACK PORCH	3.810 µs (120 dots)	3.232 µs (160 dots)	3.910 µs (224 dots)
H	E - ACTIVE TIME	20.317 µs (640 dots)	16.162 µs (800 dots)	14.524 µs (832 dots)
H	F - FRONT PORCH	0.508 µs (16 dots)	0.323 µs (16 dots)	0.559 µs (32 dots)
V	f V	75.0000 Hz	75.0000 Hz	74.5500 Hz
V	A - PERIOD	13.333 ms (500 lines)	13.333 ms (625 lines)	13.414 ms (667 lines)
V	B - BLANKING TIME	0.533 ms (20 lines)	0.533 ms (25 lines)	0.865 ms (43 lines)
V	C - SYNC WIDTH	0.080 ms (3 lines)	0.064 ms (3 lines)	0.060 ms (3 lines)
V	D - BACK PORCH	0.427 ms (16 lines)	0.448 ms (21 lines)	0.784 ms (39 lines)
V	E - ACTIVE TIME	12.800 ms (480 lines)	12.800 ms (600 lines)	12.549 ms (624 lines)
V	F - FRONT PORCH	0.027 ms (1 lines)	0.021 ms (1 lines)	0.020 ms (1 lines)
	SYNC POLARITY(H/V)	Negative / Negative	Positive / Positive	Negative / Negative

FOR RESERVATION

		MODE - 7	MODE - 8
		1024 × 768 (70)	1024 × 768 (72)
	DOT CLOCK	75.0000 MHz	75.0000 MHz
H	f H	56.4759 KHz	57.8704 KHz
	A - PERIOD	17.707 µs (1,328 dots)	17.280 µs (1,296 dots)
	B - BLANKING TIME	4.053 µs (304 dots)	3.627 µs (272 dots)
	C - SYNC WIDTH	1.813 µs (136 dots)	1.920 µs (144 dots)
	D - BACK PORCH	1.920 µs (144 dots)	1.387 µs (104 dots)
	E - ACTIVE TIME	13.653 µs (1,024 dots)	13.653 µs (1,024 dots)
	F - FRONT PORCH	0.320 µs (24 dots)	0.320 µs (24 dots)
V	f V	70.0694 Hz	71.7995 Hz
	A - PERIOD	14.272 ms (806 lines)	13.928 ms (806 lines)
	B - BLANKING TIME	0.673 ms (38 lines)	0.657 ms (38 lines)
	C - SYNC WIDTH	0.106 ms (6 lines)	0.104 ms (6 lines)
	D - BACK PORCH	0.513 ms (29 lines)	0.501 ms (29 lines)
	E - ACTIVE TIME	13.599 ms (768 lines)	13.271 ms (768 lines)
	F - FRONT PORCH	0.053 ms (3 lines)	0.052 ms (3 lines)
	SYNC POLARITY(H/V)	Negative / Negative	Negative / Negative

FOR ADJUSTMENT

		HV5 - 1	HV5 - 2	HV5 - 3
	DOT CLOCK	22.6000 MHz	40.2480 MHz	64.0400 MHz
H	f H	29.5039 KHz	39.0000 KHz	53.9966 KHz
	A - PERIOD	33.894 µs (766 dots)	25.641 µs (1,032 dots)	18.520 µs (1,186 dots)
	B - BLANKING TIME	8.496 µs (192 dots)	3.926 µs (158 dots)	4.497 µs (288 dots)
	C - SYNC WIDTH	4.115 µs (93 dots)	1.491 µs (60 dots)	1.718 µs (110 dots)
	D - BACK PORCH	2.788 µs (63 dots)	2.336 µs (94 dots)	2.186 µs (140 dots)
	E - ACTIVE TIME	25.398 µs (574 dots)	21.715 µs (874 dots)	14.022 µs (898 dots)
	F - FRONT PORCH	1.593 µs (36 dots)	0.099 µs (4 dots)	0.593 µs (38 dots)
V	f V	48.0520 Hz	77.0751 Hz	105.0518 Hz
	A - PERIOD	20.811 ms (614 lines)	12.974 ms (506 lines)	9.519 ms (514 lines)
	B - BLANKING TIME	0.915 ms (27 lines)	0.744 ms (29 lines)	0.482 ms (26 lines)
	C - SYNC WIDTH	0.102 ms (3 lines)	0.103 ms (4 lines)	0.037 ms (2 lines)
	D - BACK PORCH	0.712 ms (21 lines)	0.513 ms (20 lines)	0.352 ms (19 lines)
	E - ACTIVE TIME	19.896 ms (587 lines)	12.231 ms (477 lines)	9.038 ms (488 lines)
	F - FRONT PORCH	0.102 ms (3 lines)	0.128 ms (5 lines)	0.093 ms (5 lines)
	SYNC POLARITY(H/V)	Negative / Negative	Negative / Negative	Negative / Negative

FOR ADJUSTMENT

		HV5 - 4
	DOT CLOCK	93.4300 MHz
H	f H	69.9850 KHz
	A - PERIOD	14.289 µs (1,335 dots)
	B - BLANKING TIME	3.329 µs (311 dots)
	C - SYNC WIDTH	1.092 µs (102 dots)
	D - BACK PORCH	1.820 µs (170 dots)
	E - ACTIVE TIME	10.960 µs (1,024 dots)
	F - FRONT PORCH	0.417 µs (39 dots)
V	f V	165.0590 Hz
	A - PERIOD	6.058 ms (424 lines)
	B - BLANKING TIME	0.457 ms (32 lines)
	C - SYNC WIDTH	0.043 ms (3 lines)
	D - BACK PORCH	0.343 ms (24 lines)
	E - ACTIVE TIME	5.601 ms (392 lines)
	F - FRONT PORCH	0.071 ms (5 lines)
	SYNC POLARITY(H/V)	Negative / Negative

5.4 Acceptable timing

- If your timing is within following specification, this CRT display can automatically function with a certain size and position.

Horizontal: Sync frequency: 30.0 ~ 69.0 kHz
Blanking Time: ≥ 3.0 μs
Back Porch: ≥ 1.25 μs
Front Porch: ≤ Back Porch
Sync Width: ≥ 1.2 μs

Vertical: Sync frequency: 50.0 ~ 160.0 Hz
Blanking Time: ≥ 0.5 ms
Back Porch: ≥ 0.4 ms
Sync Width: ≥ 0.045 ms

- Several items like size, position and distortion can be adjusted through OSD menu, and if you want to keep it, please push the key [1] for memory, or keep the key untouched for about 20 seconds, it is automatically memorized.

NOTE : In case of RECALL, the key is untouched for about 30 seconds, RECALL function will be canselled.

Please note, however, that there is the case you can not get the size and/or position you want,
(for example, in case Display video Time is too short, you can't get bigger size of the image.)

- The CRT adopted in this CRT display is designed to minimize the moire phenomenon at suitable size for typical display modes. However, there might be a display format among many formats, in which the moire phenomenon appears on this display.

5.5 Signal level and input impedance

5.5.1 Video Signal level
This CRT display is adjusted at the factory using 0.7V p-p Video Signal, Black level is 0V.

5.5.2 Sync Signal level
•H/V Separate, H/V Mixed : TTL level
•Sync on Green : 0.3 V p-p

5.5.3 Input impedance
•Video input: 75 Ω
•Sync input: ≥ 1 kΩ

5.6 Display performance

5.6.1 Display area
1) PRESET TIMING

	(MODE 1 & 2)	(MODE 3)
WIDTH	: 300 mm ± 5 mm	286 mm ± 5 mm
HEIGHT	: 225 mm ± 5 mm	229 mm ± 5 mm

5.6.2 Centering
1) PRESET TIMING (MODE1~3)
IA – BI ≤ 5 mm
IC – DI ≤ 5 mm

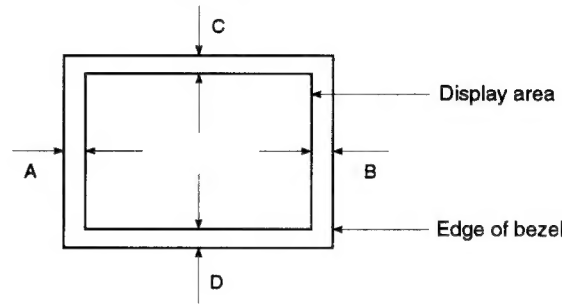

5.6.3 Distortion
1) Trapezoid

$$\left|\frac{AC - BD}{AC + BD}\right| \times 100 \leq 1\ \%$$

$$\left|\frac{AB - CD}{AB + CD}\right| \times 100 \leq 1\ \%$$

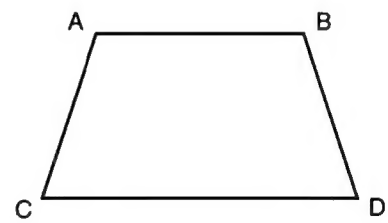

2) Parallelogram
a, b ≤ 2 mm

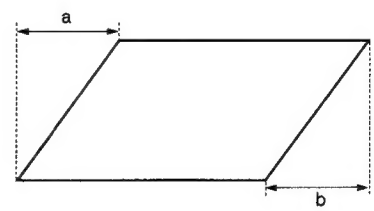

3) Pincushion and Barrel

|C1|, |C2| ≤ 2.5 mm

|d1|, |d2| ≤ 2.5 mm

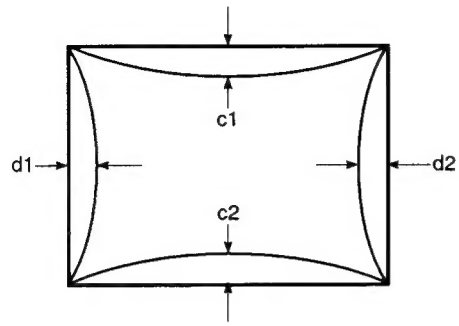

5.6.4 Rotation

|H1 – H2| ≤ 2.2 mm

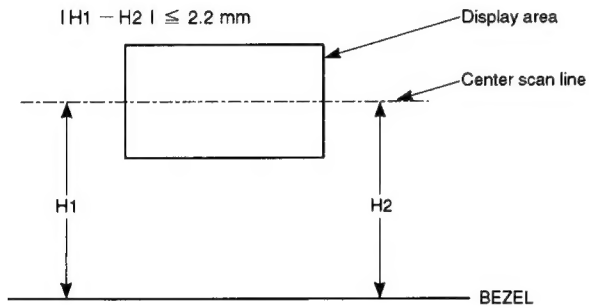

5.6.5 Linearity

Horizontal linearity

$$= \frac{X\,max. - X\,min.}{X\,max. + X\,min.} \times 100\,\% \leq 6\,\%$$

Vertical linearity

$$= \frac{Y\,max. - Y\,min.}{Y\,max. + Y\,min.} \times 100\,\% \leq 5\,\%$$

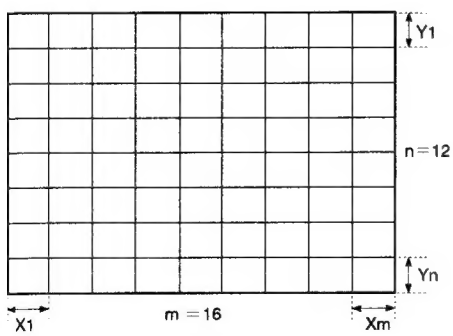

<Conditions>

Display image ------- crosshatch pattern

Maximum and minimum values should not be adjacent to each other.

X max. is maximum value among X1~Xm

X min. is minimum value among X1~Xm

Y max. is maximum value among Y1~Yn

Y min. is minimum value among Y1~Yn

5.7 General performance

5.7.1 Video output

Bandwidth	86 MHz (Typ.)

5.7.2 Maximum luminance

Value	120 cd/m² (Typ.) for 5% white field at the center of the display area. 110 cd/m² (Typ.) for 100% white field at the center of the display area. Specified by 9300 K + 27 MPCD
Conditions	Display image : White full flat field Luminance : Max. (Contrast : Max.) (Brightness :Detent point)

5.7.3 Minimum luminance

Value	≤ 26 cd/m² at the center of the display area. Specified by 9300 K + 27 MPCD
Conditions	Display image : White full flat field Luminance : Min. (Contrast : Min.) (Brightness : Detent point)

5.7.4 Brightness variation

Value	70 % (Min.) Variation = C/A X 100
Conditions	Display image : White full flat field Luminance : MAX (Contrast : MAX) (Brightness : Detent point) A ; Luminance at center position C ; Luminance at position of lowest brightness

5.7.5 Display area regulation

	Display area variation	Range of variation
Due to Luminance	within 1.5 % of display area	26~110 cd/m² (white flat field)
Due to Power Supply	within 1.5 % of display area	AC : 90-132 V or 180-264 V
Due to Temperature	within 2 % of display area	0 - 40° C (fh=30-65 kHz)

5.7.6 Color Point

< Conditions >

Display image : White flat field at the center of the display area.

Luminance : Brightness Detent point.

Contrast	max	min
Value	9300 K + 27 MPCD x = 0.281 ± 0.020 y = 0.311 ± 0.020	9300 K + 27 MPCD x = 0.281 ± 0.020 y = 0.311 ± 0.020

5.7.7 Misconvergence

Center area of display (A) : 0.3 mm (Max.)

Corner area of display (B) : 0.4 mm (Max.)

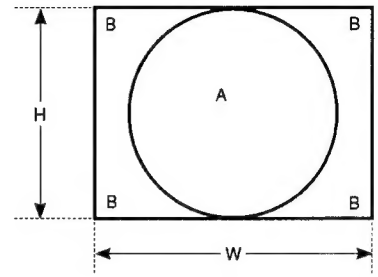

<Conditions>

Display image : Crosshatch pattern mixed with R, G and B colors.

Convergence gauge : KLEIN CM7AG or equivalent.

Display area : W x H 300 x 225 mm

5.7.8 Purity

Conspicuous mislanding shall not be visible within display area at a distance of 60cm from CRT surface.

<Conditions>

Display image : White flat field

Luminance : Contrast max, Brightness Detent point.

5.7.9 Jitter

Invisible at a distance of 60 cm from CRT surface.

6. ENVIRONMENTS

6.1 Ambient temperature, humidity and altitude

	Operating	Storage and shipment
Temperature	0 ~ 40° C *1 (fh = 30-65 kHz)	-20 ~ +60° C (-4 ~ 140° F)
Humidity	5 ~ 90 % *2	5 ~ 90 % *2
Altitude	3,000 m (Max.) (10,000 ft)	12,000 m (Max.) (40,000 ft)

*1 0 ~ 35° C for 66 ~ 69 kHz

*2 Non-condensation

6.2 Vibration and shock

6.2.1 Vibration

	Order of tests	Direction of vibration		Acceleration		Frequency	Sweep	Test time
				Non-operation	Storage and shipment			
Unpacked	1	Vertical	Up to down	2.9 m/s² (0.3 G)		5 - 55 Hz	120 s	30 min.
	2	Horizontal	Front to back					15 min.
	3		Right to left					
Packed	1	Vertical	Up to down		10m/s² (1.0 G)	5 - 50 Hz	810 s Logsweep	40 min.
	2	Horizontal	Front to back		5 m/s² (0.5 G)			20 min.
	3		Right to left					

6.2.2 Shock (Drop test)

Unpacked	20 G One time for each face (6 faces) (non-operation)			
Packed	Order of drop	Face to drop is to face the floor. (See the figure)	Height	Number of drop
	1	a, b, c, d, e, g	40 cm	1 time for each
	2	f	55 cm	

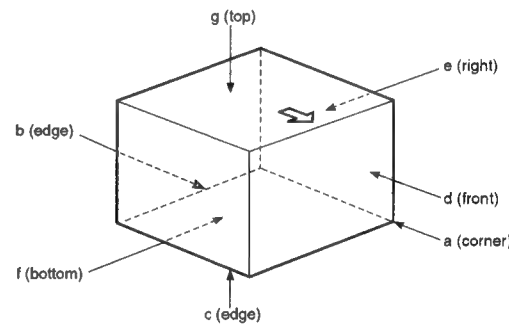

7. REGULATORY STANDARDS

7.1 Safety standards

Applicable standards

UL 1950, Listing

CSA 22.2 No. 950, Products Certification

TüV (IEC-950)/GS (ZH1)

DHHS, 21 CFR subchapter J, X-Ray Radiation

PTB, X-Ray Radiation, Approval

HWC

NORDIC

Energy Star

7.2 EMC standards

Designed to meet following standards

VCC I class II

FCC: FCC part 15, subpart B, class-B

VDE 0878/06.83

Vfg 243/1991

CISPR22 class B

MPR-II Radiation

<EMI test pattern>

White, full "H" characters (9 x 14 dots), block (12 x 24 dots) "H" character font is as follows:

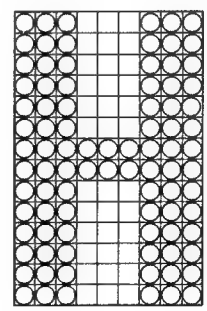

8. POWER CORD

UL and CSA approved AC power cord is put in packaged. Length : 2.0 meter (6.56 feet) if you use in other country (for example Germany), please use a power cord approved by safety agency of each country (VDE in Germanu).

9. SIGNAL CABLE

Signal cable with Mini D-Sub 15P connectors at both end is put in package.

Length : 1.5 meter (4.93 feet)

10. COLOR CRT DEFECTIVE STANDARD

10.1 Specification of screen blemishes

This instruction is applied to inspection of the screen faults and of the glass quality of the faceplate.

10.2 Test procedure

10.2.1 Tests are to be done under the following two conditions:

(a) With a blanked white raster at 80 μ A.

(b) With incident light (white light of 700 - 1000 lux at the center of the screen; tube is not operated).

10.2.2 Viewing distance should be 60 cm minimum. Faults not visible at this viewing distance are permitted.

10.2.3 The Following quality areas are specified:

Zone A: Rectangular area (sides X and Y) of which the point of intersection of the diagonals coincides with the mechani-cal center of the screen.

Zone B: The remaining screen area except zone A.

Specifie zone is applied to glass faceplate defects.

	Screen size	
	X	Y
Zone A	293 mm	219 mm

10.2.4 Remarks concerning faults:

a)Unless otherwise specified, the size of a fault is the smallest value found with one of the two formulas:

$$\frac{a+b}{a} \quad , \quad \frac{a}{20} + 2b \quad (a = \text{length}, b = \text{width})$$

b)For entirely or partially missing and/or non-fluorescent phosphor dots hold the following definitions:

Entire defect: Remaining part is not more than 50% of the complete dot.

Partical defect: Remaining part is between 50% and 75% of the complete dot.

10.3 Permissible limit

10.3.1 Screen faults

Missing phosphor dots, black spots, filled mask holes and copper stains

Size of defects				Max. permissible number	Min. permissible distance between defects	Max. permissible number in circle of ϕ 50 mm
Entire defects	A	A1	3 adjacent trios or more	0	—	—
		A2	3 adjacent same color dots or more	0		
		A3	More than 6 adjacent dots	0		
	B	B1	2 adjacent trio	0	—	—
		B2	4 or 5 adjacent dots	0		
		B3	2 adjacent same color dots	1		
	C	C1	1 trio	1	20 mm	—
		C2	2 adjacent different color dots	2		
		C3	1 dot	7		
	B + C			—	20 mm	—
Partial defects	D		Partial defects	—	—	5
Total pieces of defects excluding partial defects				7	—	—

— Entire defects having separation less than min. permissible distance are defined as an adjacent defects.

— Defects of remaining part more than 75% is ignored, except for concentration having diameter more than ϕ 8 mm.

10.3.2 Glass faceplate defects

(A) Air bubbles, open bubbles, stones and elongated air bubbles.

Area			Zone A	Zone B
Permissible major defects	Air Bubble. (average dia.)		0.51 – 0.70 mm	0.51 – 0.70 mm
	Spot and open air bubble (average dia.)		0.41 – 0.60 mm	0.41 – 0.60 mm
	Maximum Permissible number	Each zone	1	1
		Total	2	
	Minimum allowable distance among defects		57 mm	
Permissible defects within any 50 m-dia,-circle	Air Bubble. (average dia.)		0.25 – 0.50 mm	
	Spot and open air bubble (average dia.)		12.7 mm	
	Max. permissible number		2	
	Δ Minimum allowable distance among defects		0.20 – 0.40 mm	
ΔΔ Elongated air bubble (permissible size)		Width	0.10 – 0.20 mm	0.10 – 0.30 mm
		Length	4.0mm	6.0 mm

Δ This is also applied to the distance to major defects.

ΔΔ This should be evaluated by its average diameter, and then relevant standards of air bubble are applied except number of defects for each zone, minimum distance among defects and maximum limit of average diameter.

(B) Scratches

Width (mm)	Maximum allowable length (mm)
< 0.05	permitted
0.05 - 0.10	25.4
0.11 - 0.15	12.7
> 0.15	rejected

(C) Other defects not stated above such as chips, cracks, bruises, shear marks, clouds and polished patterns are not allowed when they substantially spoil appearance, viewed from the viewing distance.

DIMENSIONS

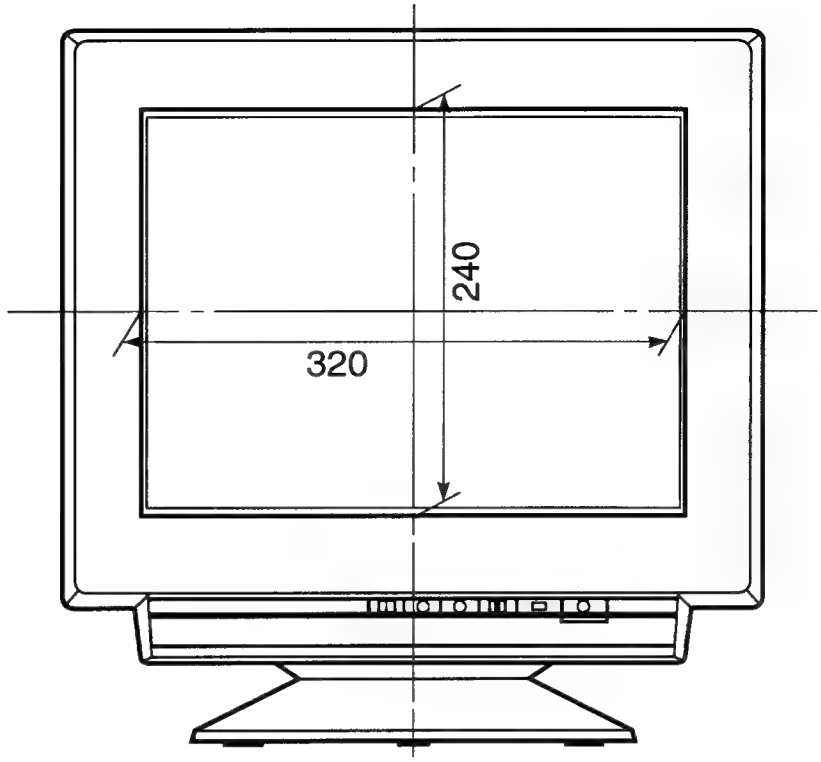

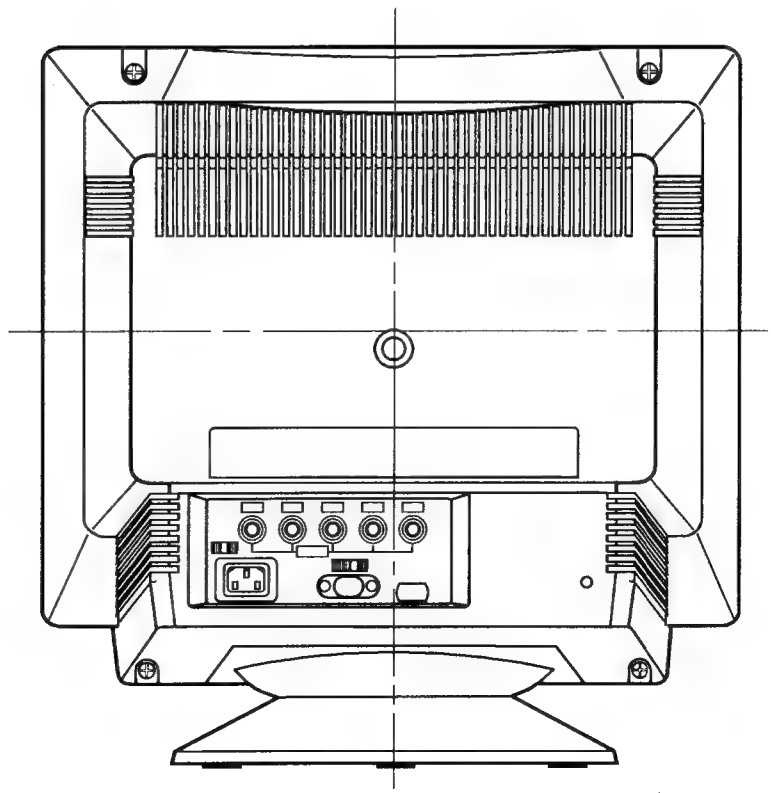

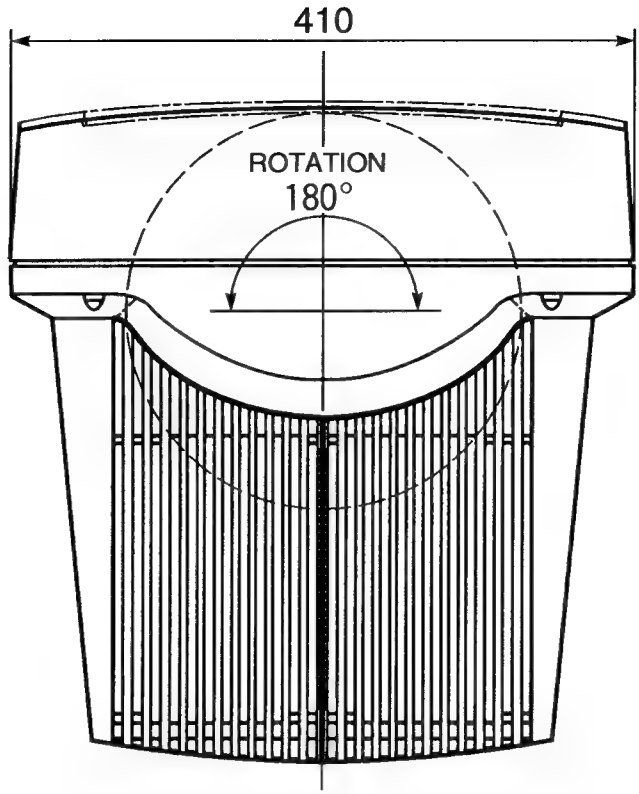
410
ROTATION
180°

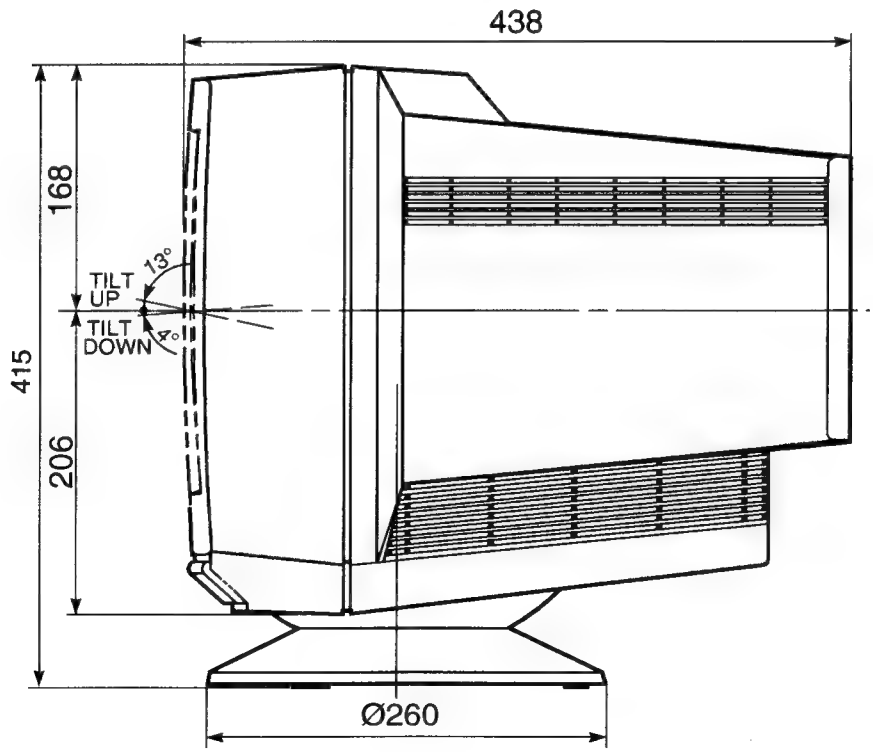
438
168
TILT UP
13°
TILT DOWN
4°
415
206
Ø260

DISASSEMBLY INSTRUCTIONS

1. Rear cover removal

Note: Spread a mat underneath to avoid damaging the CRT surface.

1) Remove four large screws ① and small screw ② from the rear cover.
2) Remove the cover.
3) Remove eight screws ③ from the shield case.
4) Remove the shield case.

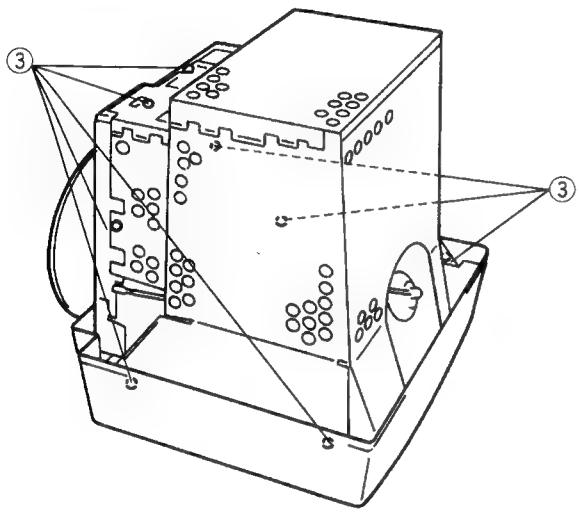

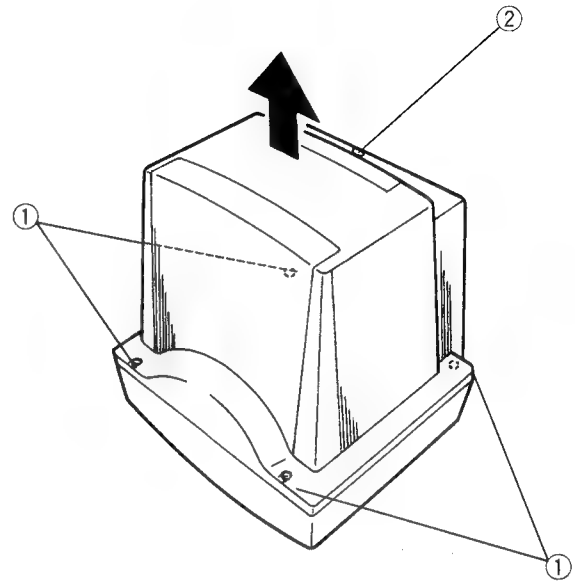

2. Video PCB removal

1) Remove four screws ④ securing the shield cover.
2) Desolder (B) and Remove the shield cover (A).

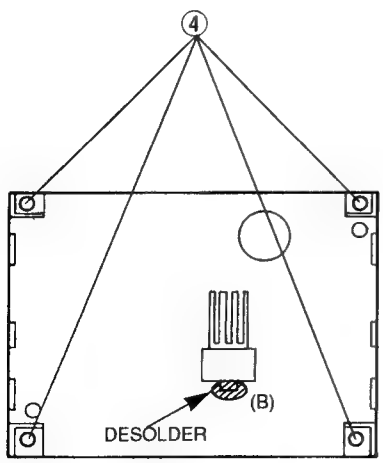

(A)

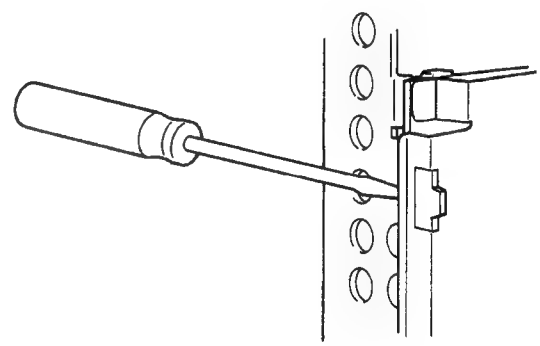

3) Loosen the screw ⑤ securing the CRT neck and the shield case.
4) Remove the PCB block from the CRT.
5) Desolder and remove the N382B connector ⑥.
6) Remove two focus leads ⑦ after pulling up the focus lead securing lever.
7) Remove ground connector ⑧ (N106) connected to the PCB.
8) Remove two flexible PCBs ⑩.
9) Remove N104B connector ⑨.
10) Remove the PCB from the shield case.

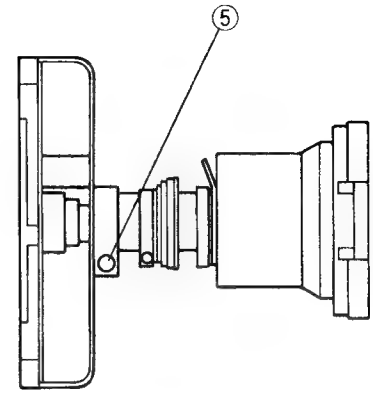

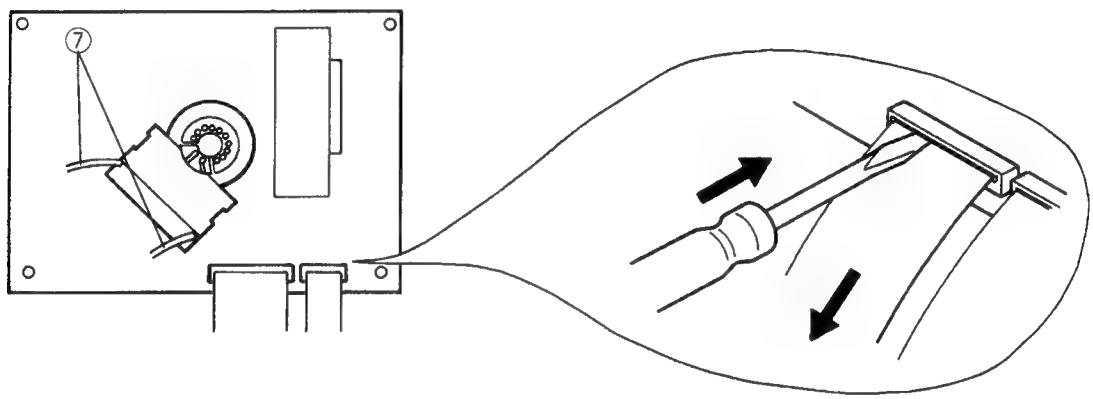

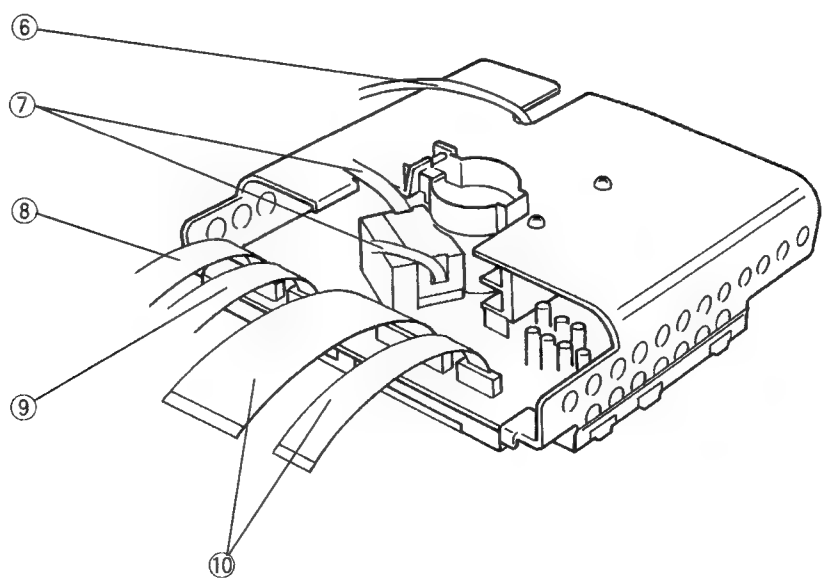

3. Main PCB Removal

1) Remove the connector ⑪ (N802) of the degauss coil.
2) Remove the DY connector ⑫.
3) Remove the anode cap.
4) Remove two ground connector ⑬.
5) Move the CRT face down and remove two screws ⑭ securing the bottom fitting metal.
6) Remove the fitting metal and the PCB from the cabinet.
7) Remove eight screws ⑮ securing the fitting metal and PCB.
8) Remove the PCB ⑯ with the figure referenced.

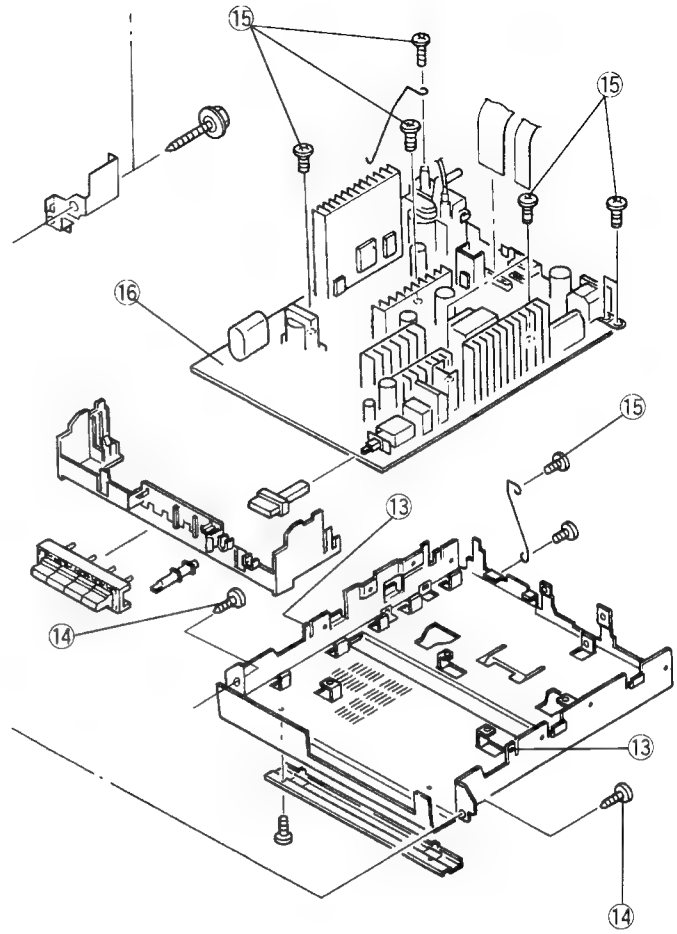

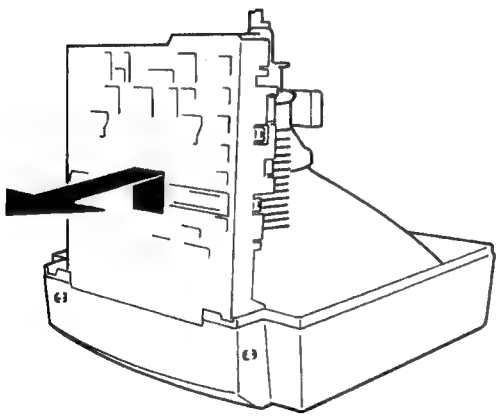

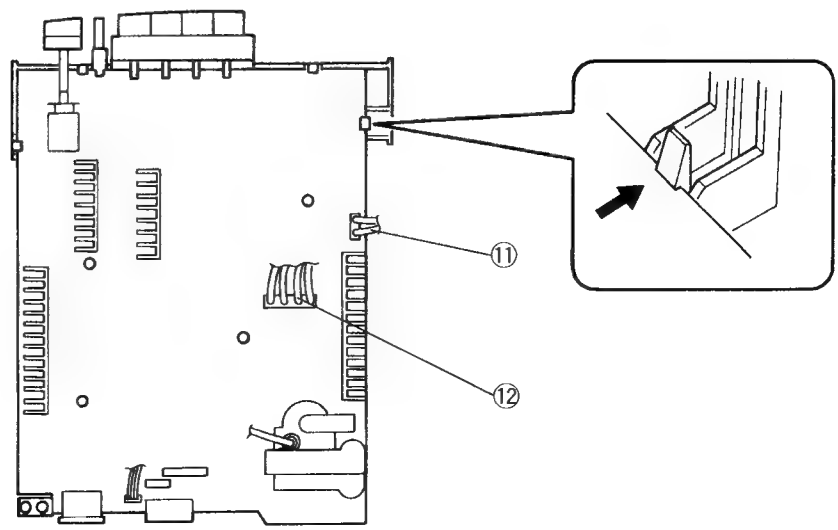

CONTROL LOCATION

Basic operation of parts

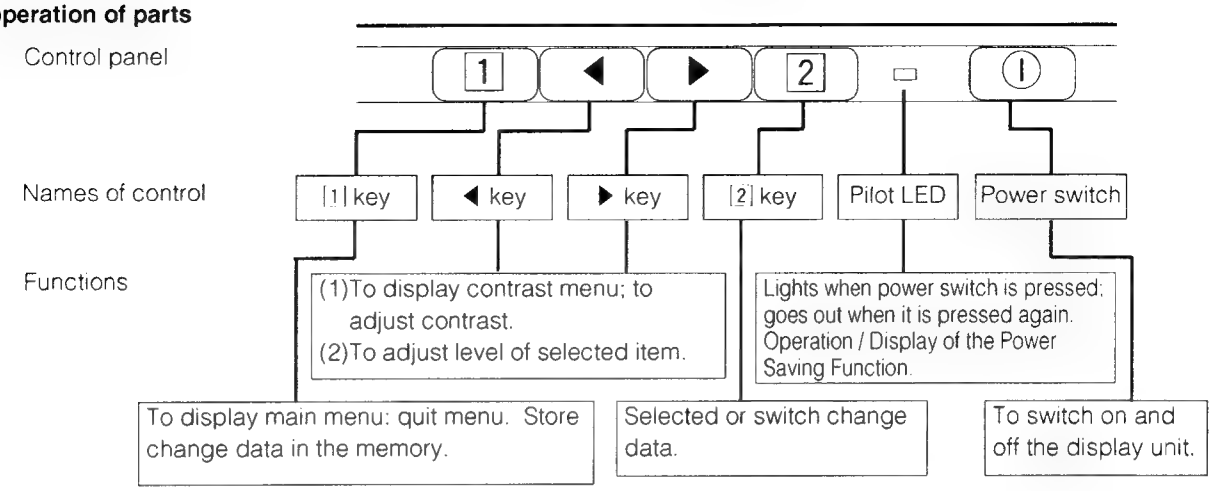

* For a detailed description of the functions of the [1] key, ◀ key, ▶ key, and [2] key, refer to the next section onward.

Examples of on-screen operation

A. Contrast adjustment

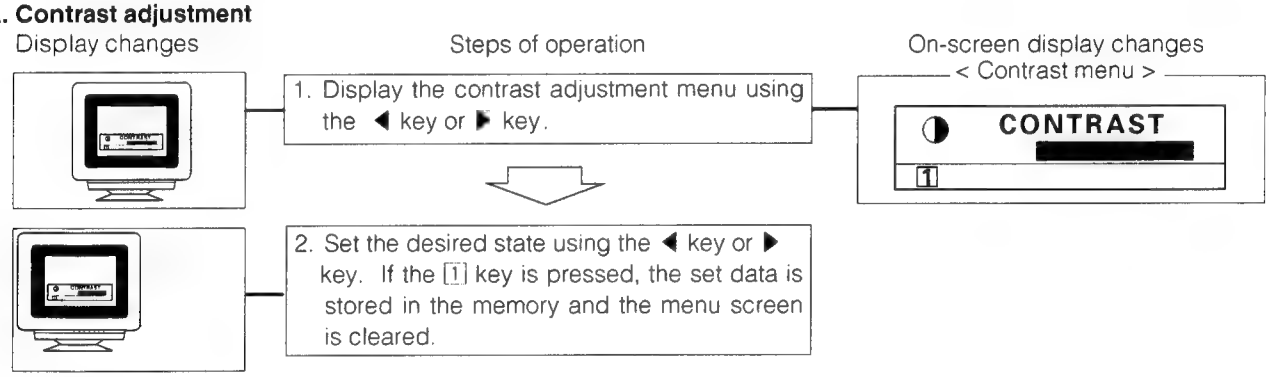

B. H. size adjustment

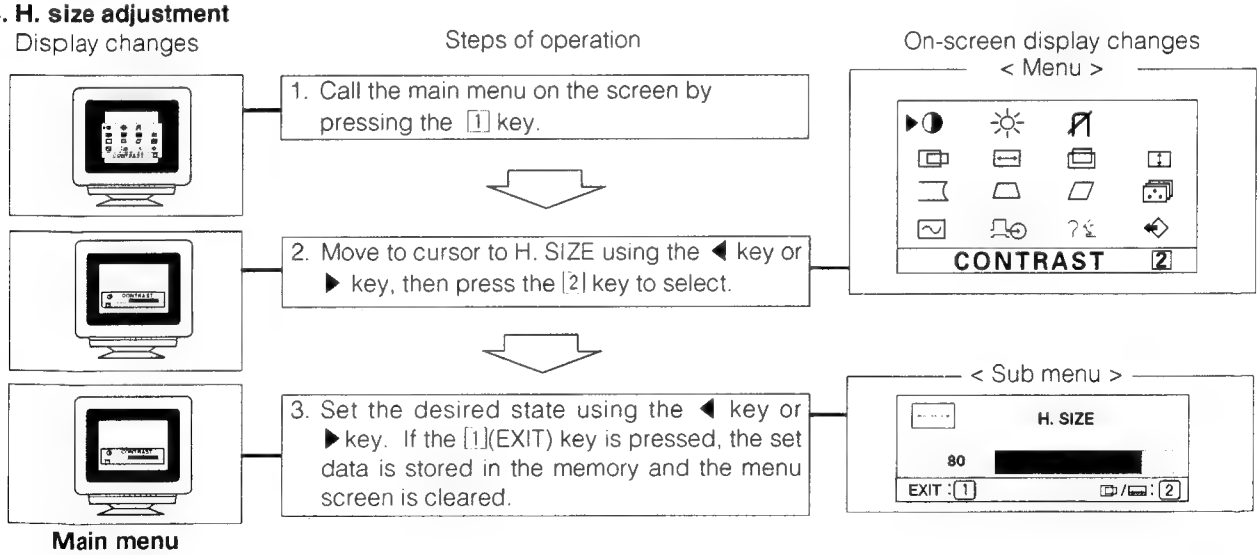

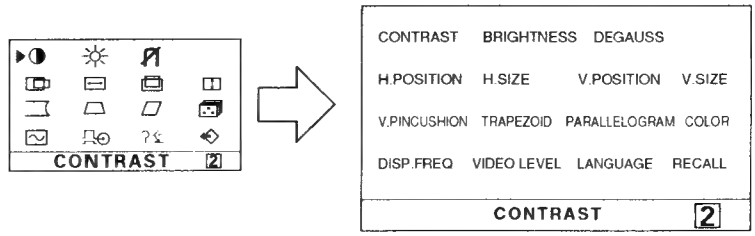

CAUTION FOR ADJUSTMENT AND REPAIR

1. Degaussing is inevitably required at purity adjustment or convergence adjustment.
2. If you check or adjust electrical specification or function, more than 20 minutes burn-in is required.
3. Reforming of the lead wire is required after your repair work.
4. Prior to starting work, be sure to check that the input signal is at the specified timing and that the polarity is as specified in all modes.
5. Brightness control: After mounting the rear cover, brightness tends to decrease about 5 cd/m² on a flat white field and about 1 cm/m² on a white raster field. This should be taken into consideration.
6. Brightness stabilizing time: It takes about 20 to 50 seconds for the brightness to stabilize after turning the power off for 5 seconds (AC). Therefore, care should be taken to this.
7. Aging should be made in white raster of 30 ~ 50 cd/m² and raster size, 320 x 240 mm before adjusting the ITC.
8. Set the CONTRAST to MAX and BRIGHTNESS to CENTER using the O.S.D.

CAUTION FOR SERVICING

When servicing or replacing the CRT, high voltage sometimes remains on the anode. So, completely discharge high voltage before servicing or replacing the CRT so as to prevent a shock to the service person.

CRT Anode Discharge

1. When you check the CRT anode or replace the CRT, discharge the CRT anode to the external conductive coating (aquadag) of CRT, especially when checked right after power turn-off.
2. Ground one end of a jumper wire which has a resistor (30 kV < resisting pressure 100 MΩ) and connect the other point to the CRT anode.

Note: Grounding must be done first.

This model has a section that does not share a common ground with the power supply section. The different sections are referred to as the HOT section and the COLD section in the precautions below.

1. Do not touch the HOT section and the COLD section at the same time. You may be hit by an electric shock.
2. Do not short the HOT section to the COLD section. This could blow the fuse or damage parts.
3. Never measure the HOT section and the COLD section at the same time when using tools such as oscilloscopes or multimeters.
4. Always unplug the unit before beginning any operation such as removing the chassis.

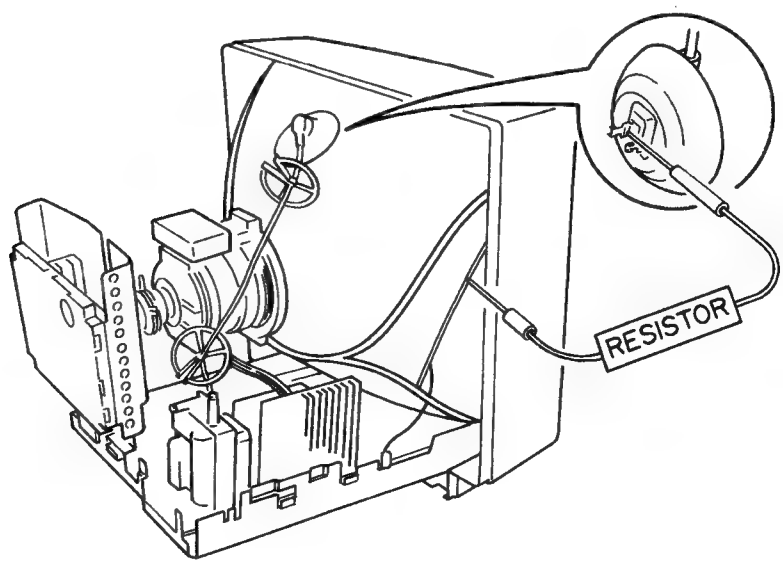

ADJUSTMENT AND CHECK PROCEDURE

INTRODUCTION

- This monitor is controlled by a microcomputer. With the exception of purity/convergence/focus all is digitally adjusted.
  Therefore a computer, the dedicated control software, the dedicated interface, a 9~12 V power supply, and a signal generator are required servicing.

TOOLS REQUIRED

- **Computer**
  The control software is IBM PC compatible only. Therefore, it is not compatible with any other operating systems. For further information please contact our sales office.

- **Control Software**
  The HV5 chassis can only use "TXD1733 adjustment program disk". No other program can access the EEPROM on the monitor. For further information please contact our sales office.

- **Interface**
  The interface is dedicated to work only with the control software and the HV chassis. There are no substitutes for this interface. For further information please contact our sales office.

- **Power Supply**
  A DC 9~12 V (+9~12 V/–9~12 V) power supply is required for operating the interface.

- **Signal Generator**
  It is necessary for you to use a signal generator which operates on fH 82 kHz, fv 160 Hz, and fc 135 MHz bands.

INTERFACE CONNECTION

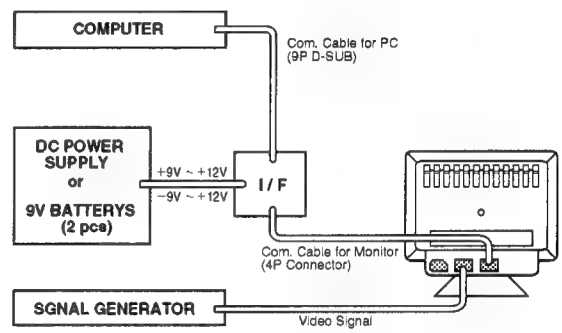

INTERFACE SCHEMATIC DIAGRAM

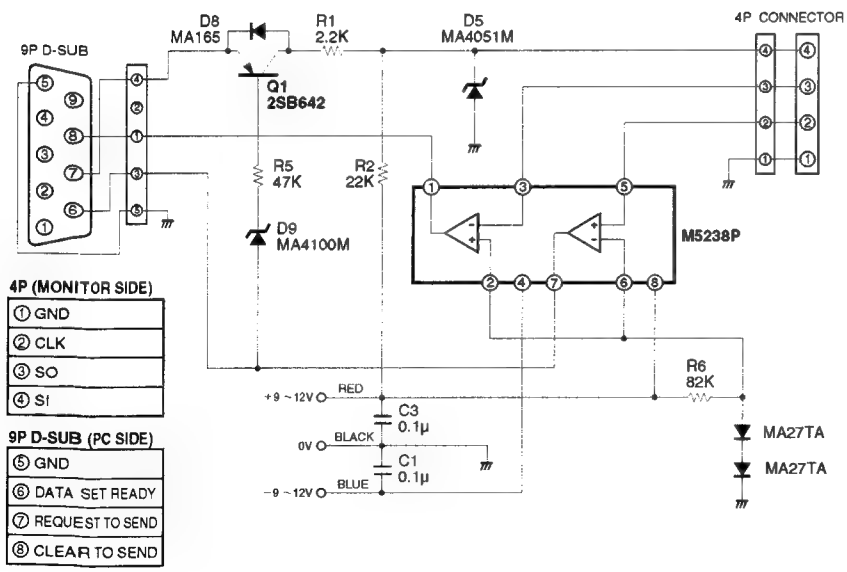

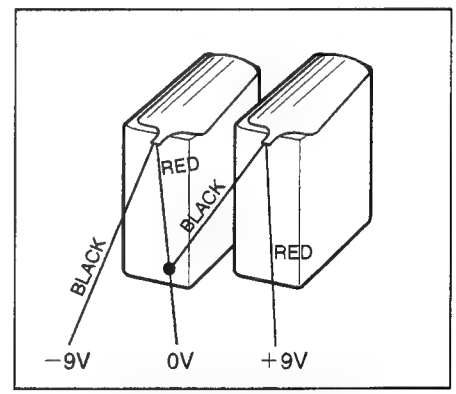

BATTERY CONNECTION

OTHER TOOLS

- Oscilloscope (dual trace)
- Scope probe – Attenuation: 100:1
  Attenuation: 10:1
- Digital Voltmeter – Range: 0 to 1000 V DC
  Accuracy: 0.1 %
- TV color Analyzer II – that reads luminance and chromaticity X and Y coordinates.
- Digital High Voltmeter
- AC power supply – Output voltage : 0 to 300 V
- Degaussing coil
- Convergence meter
- Scale
- Double-faced scale
- Microscope – Scale factor: 50
- White racquer (Paint)

STANDARD CONDITION OF ADJUSTMENT PROCEDURE

- Signal timing : Standard timing 1024 x 768 (See page 5)
- Display pattern : White, full "H" character
- Signal level : V/H: TTL level video: 700 mV
- Input source : AC 120 V, 60 Hz
- Ambient temperature : Room temperature
- Warm-up time : More than 30 minutes
- Brightness control : Center
- Contrast control : Max.
- Magnetic field : Vertical: 40 μT
  Horizontal: 0 μT
- Signal cable : Attached

Video input signal from PC.

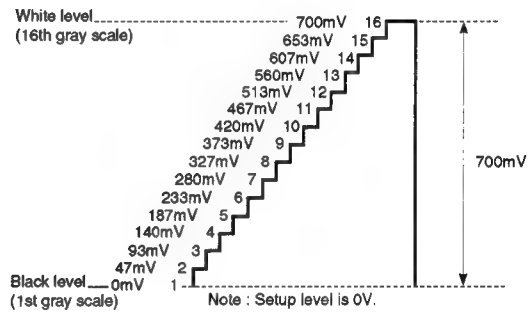

- Use a Helmholtz device to adjust an unit with no horizontal magnetic field and a vertical field of 40 μT. Inspect the unit under the same conditions.
- The ambient illuminance must be 200 lux.
- Use an external degaussing coil any time the DEGAUSS switch does not remove color shading.
- To check the image width, height, linearity and distortion, proceed as below.

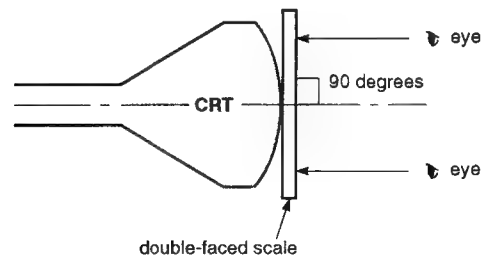

Measure level with respect to tube axis.

ADJUSTMENT SOFTWARE

1. Software operating procedure

A) Power on the computer.

B) Connect the Communication cable for monitor adjustment.

C) Insert the adjustment disk into the drive.

D) At the A:> prompt type "VSR" , then press [ENTER].

> A function to identify the connected monitor is provided to prevent accidents due to erroneous use of the HV5 chassis program. If this program is used for any monitor other than the HV5, the message reading "This monitor is not an HV5 chassis. All further activity has been prevented" is displayed and the operation is stopped.

E) Refer to the adjustment procedures.

2. Adjustment Program

Main Menu of Adjustment Program

<<HV5 ADJUST PROGRAM MAIN MENU>>		(e: exit)	<Ver *.*>
1)	Load data from FILE	6)	Clear User preset
2)	Adjust H. OSC freerun	7)	Save data to FILE
3)	Adjust VSR setting	8)	Special ADJUST
4)	Adjust OTHER setting	9)	Information Service
5)	Adjust Factory preset	10)	Show Version & Error

Description of Function of Each Menu

1) Load Data from File
   This transfers the data file from the disk to the EEPROM on the monitor.
2) Adjust H. OSC Freerun
   To guarantee that the full range of horizontal frequencies operate correctly. The reference oscillation frequency should be set.
3) Adjust VSR Setting
   To guarantee that the full range of horizontal frequencies operate correctly. The reference voltage and the distortion offset data should be set.
4) Adjust Other Setting
   This is used to control the brightness and color.
5) Adjust Factory Preset
   Makes adjustments to the factory presets. This data is also referenced when in modes other than tha preset mode.
6) Clear User Preset
   Clear the data written in the user preset domain. There is no data in the user presets when the product shipped from the factory.
7) Save Data to File
   Transfers the data from the EEPROM on the monitor to a data file on a fkoppy disk or hard drive. The data file can be named anything as long as it is less than 8 characters long.
8) Special Asjust
   This menu has the following functions
   ① Related data is automatically set on the basis of adjustment results to save the time for adjustment.
   (Example: Color adjustment applies only to the 9300 K, while 6550 K and user color data are automatically set.)
   ② To prevent operation errors in changes of various type of control flags, these flags are automatically returned to the default settings (Final Tune).
9) Information Service
   Displays the H/V frequencies that is being supplied to the monitor and gives the operational status of the monitor.
10) Show Version and Error
   Shows the version of the microprocessor that is in the monitor. Also, if there is an erroe in the operation of the monitor.
   The error is displayed on the screen of the PC.

SERVICE ADJUSTMENT CONTROL LOCATION

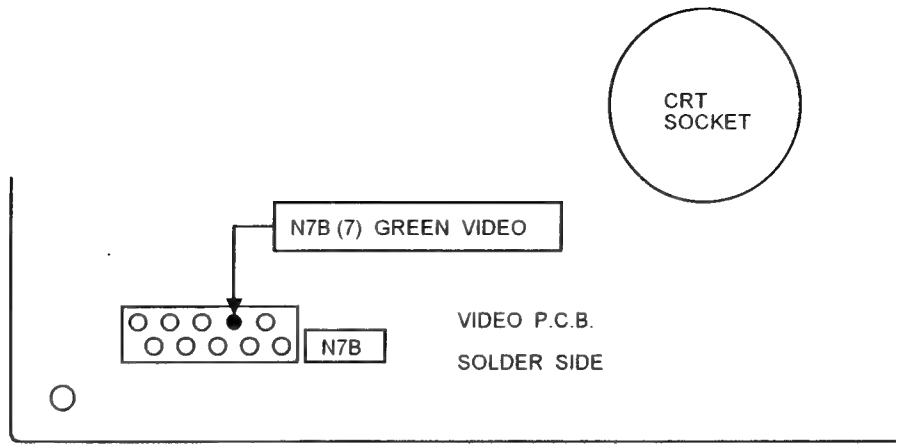

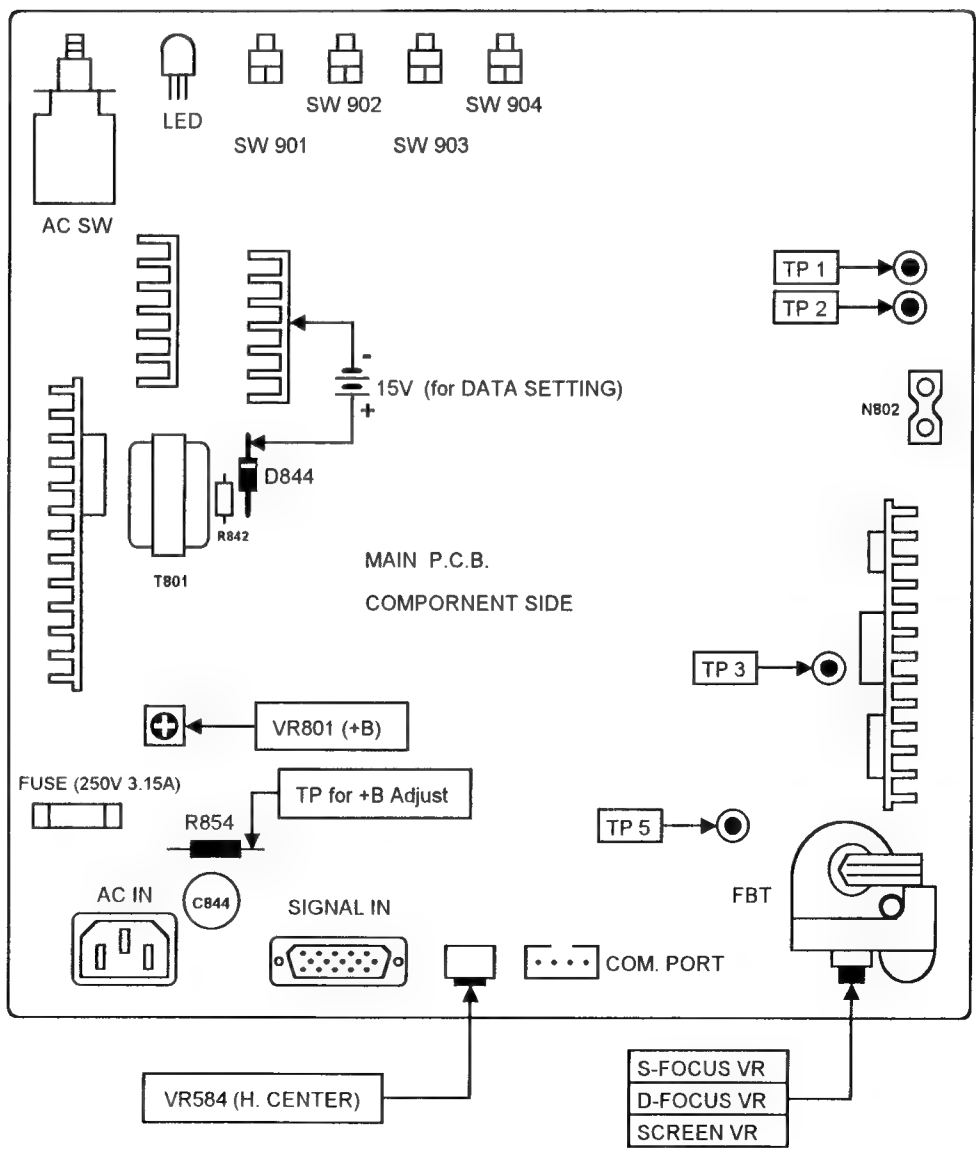

REQUIRED ADJUSTMENT PROCEDURE AFTER A PARTS IS REPLACED (✓ IS REQUIRED)

	ADJUSTMENT ITEM	REPLACED PARTS															
		MAIN P.C.B.	VIDEO P.C.B.	CRT DY FBT	IC1301 IC1302 IC1303 IC351	Q1001 Q1004 Q1005 Q1101 Q1104 Q1105 Q1201 Q1204 Q1205	IC820 PC830 Q801 Q802 Q803	IC501	IC504	IC401 IC490 IC601 Q494 Q495 Q574	IC550	IC660 Q680	Q584 Q585 L681	Q550	IC901	IC902	
A	DATA SETTING *	✓														✓	
B	+B ADJUST	✓					✓										
C	H. FREE RUN	✓						✓								✓	
D	H. DRIVE DUTY	✓						✓	✓							✓	
E	H. DRIVE +B	✓						✓			✓					✓	
F	EHT	✓		✓								✓		✓		✓	
G	H. CENTER	✓		✓									✓			✓	
H	H.V. SIZE / POSI V.PCC (1)	✓		✓				✓		✓				✓		✓	
I	H.V. SIZE / POSI V.PCC (2)	✓		✓				✓		✓				✓		✓	
J	BRIGHTNESS, COLOR	✓	✓	✓	✓	✓										✓	
K	FOCUS	✓	✓	✓	✓	✓											
L	FINAL TUNE	✓	✓	✓	✓	✓	✓	✓	✓	✓	✓	✓	✓	✓	✓	✓	
M	DATA SAVING	✓	✓	✓	✓	✓	✓	✓	✓	✓	✓	✓	✓	✓	✓	✓	
	PURITY & CONVERGENCE			✓													
	SCREEN CHECK	✓	✓	✓	✓	✓	✓	✓	✓	✓	✓	✓	✓	✓	✓	✓	

*** (A) DATA SETTING : Do not load standard data except when main P.C.B. and IC902(EEPROM) are replaced.**

ADJUSTMENT PROCEDURE

1. Description of Adjustment Method

	ITEM Program Menu	◇ Test Meter ▼ Test Point ☐ Pattern	JOB CODE	Input Signal	Operation	Adjusting Value
A	**STANDARD DATA SETTING** 1) Load data from FILE	▼ D844 - GND Refer to service adjustment control location on page 23	A1 A2 A3 A4 AE		Do not connect the power and signal cable to monitor. Apply 15V to D844 CATHODE and GND. (Do not apply 5V to IC901. Because IC876 supply 5V and RESET signal to IC901) Set the cell to the menu at left and press ↵. A massage **FILE -> EEPROM FILE NAME (q or Q escape) [ ] :** is displayed. So key in the DACDATA.DAT (when using the standard data) and press ↵. Disconnect 15V cable, then turn on the power switch of the monitor.	
	Do not load standard data except when Main P.C.B. and EEPROM are replaced.					
B	**+B ADJUST**	◇ Digital voltmeter ▼ R854 Refer to service adjustment control location on page 23	B1 B2	Mode-2	Check that the input signal to the monitor is [fH 60.0KHz] and [fV 75.0Hz] and press ↵. Make the adjustment to the value shown at right by turning the VR801 on the main PCB.	98V +2 / -1V
C	**H. FREE RUN** 2) Adjust H. OSC freerun	☐ Crosshatch	C1 C2 C3 C4 C5 C6 C7 C8 C9 C10 CE	 Mode-1 HV5-2 HV5-3 HV5-4 	Set the cell to the menu at left and press ↵. Set the cell to the adjusting mode INTP [0] and press ↵. Check that the input signal to the monitor is [fH 29.5KHz] and [fV 48.0Hz] and press ↵. When the screen image has stabilized, press ↵ to return to menu of C2. Input signal [fH 39.0KHz] and [fV 77.1Hz] Select Adjusting mode INTP [1], and repeat above procedure. Input signal [fH 54.0KHz] and [fV 105.0Hz] Select Adjusting mode INTP [2], and repeat above procedure. Input signal [fH 70.0KHz] and [fV 165.0Hz] Select Adjusting mode INTP [3], and repeat above procedure. Press E to return to main menu.	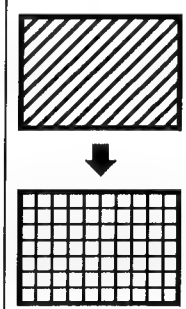

Note 1 : Check to be sure that the program disk name is **TXD1733** before making necessary adjustment.

Note 2 : Unless otherwise specified, the monitor state is as given at right.

Note 3 : The underlined places indicate the adjustment items on the screen of the PC.

	ITEM Program Menu	◇ Test Meter ▼ Test Point ☐ Pattern	JOB CODE	Input Signal	Operation	Adjusting Value
K	**FOCUS**	☐ Character	K1 K2 K3 K4	MODE-2	Check that the input signal to the monitor is [fH 60.0KHz] and [fV 75.0Hz]. Make the corner sections of the screen optimum by turning D-FOCUS VR on the FBT. Make the center section optimum by turning S-FOCUS VR on the FBT. Repeat K2 and K3 to make it optimum.	
L	**FINAL TUNE** 8) Special ADJUST		L1 L2 L3 L4 L5 L6 L7 L8 L9 L10 LE		Set the cell to the menu at left and press ↵. Select the 9:FINAL TUNE from the menu. (Step 1):Data tuning. This messages will appear : **<loading EEPROM data> ...end** **<tuning EEPROM data> ... end** **<saving data to EEPROM> ... end** **<RECALL data - PRESET data> wait a moment** (Step 2):Erase user preset data. **Erase All ' user preset data OK ? >** Press Y ↵, go to L6. (Step 3):Calcalate color data. **COLOR 6550K data OK ? >**, press Y ↵. **USER COLOR data OK ? >**, press Y ↵. **ABL data OK ? >**, press Y ↵. **finished . (Hit return key)** Press ↵, go to L8. (Step 4):Set brightness data and flag. **BRIGHT click data OK ? >**, press Y ↵. **BRIGHT min./max. limiter automatically OK ? >**, press Y ↵. **end** **<SET FLAG>** **wait a moment ... end** **tune end .** **Hit return key !** Press ↵, return to menu of L2. Press E ↵, to return to the main menu.	
M	**DATA SAVING** 7) Save data to file		M1 M2		Set the cell to the menu at left and press ↵. Key in the file name after [ ] :. Use serial number as a file name (EXAMPLE : FF5110001 = "F5110001.DAT")	

	ITEM Program Menu	◇ Test Meter ▼ Test Point ☐ Pattern	JOB CODE	Input Signal	Operation	Adjusting Value
F	**EHT ADJUST** 3) Adjust VSR setting 8) Special ADJUST	◇ Digital voltmeter ▼ TP5 ~ GND ☐ RGB off (Sync only)	F1 F2 F3 F4 F5 F6 F7 F8 FE	HV5-4	Set the cell to the menu at left and press ↵. Set the cell to the adjusting mode INTP[3] and press ↵. Check that the input signal to the monitor is [fH 70.0KHz] and [fV 165.0Hz] and press ↵. Move the cell to EHT and press ↵. Make adjustment to the value shown at right by using ← and →. Register by pressing ↵ and return to the main menu by pressing E. Set the cell to the menu at left and press ↵. Select the 5: EHT DATA CALCULATION from the menu. The computer will then display : **Calculate EHT data automatically · OK ?** Press Y to return to menu of F8, press E to return to the main menu. (When selected above menu calculation is done automatically for HV5-1, HV5-2 and HV5-3)	146.0V ±1V
G	**H. CENTER**	☐ RGB off (Sync only)	G1 G2 G3	Mode-8	Set the Brightness to MAX. Check that the input signal to the monitor is [fH 57.9KHz] and [fV 71.8Hz]. Make the adjustment as shown at right by turning the VR854 on the main PCB.	A A=B B Back raster Set the raster to the center with respect to the bezel.

	ITEM Program Menu	◇ Test Meter ▼ Test Point ☐ Pattern	JOB CODE	Input Signal	Operation	Adjusting Value
H	**H/V. SIZE, POSI and V. PCC (1)** 5) Adjust Factory preset	☐ Crosshatch	H1 H2 H3 H4 H5 H6 H7 HE	 Mode-1 Mode-2 Mode-3 	Set the cell to the menu at left and press ↵. Check that the input signal to the monitor is [fH 31.5KHz] and [fV 60.0Hz] and press ↵. Set the cell to following items, press ↵ and make the adjustment to the value shown at right by using ← and →. ① H. SIZE ② H. POSI ③ V. SIZE ④ V. POSI ⑤ V. PCC ⑥ PARALLELOGRAM ⑦ TRAPEZOID After adjusting the above, return to menu of H2 by using E and Y. Input signal [fH 60.0KHz] and [fV 75.0Hz], and repeat above procedure. After adjustment, go to H7 by using E and Y. Input signal [fH 63.7KHz] and [fV 60.0Hz], and repeat above procedure. After adjustment, return to the main menu by using E and N.	 H : 300mm ±5 V : 225mm ±5 H/V Posi : Center V. PCC : Best point H : 300mm ±5 V : 225mm ±5 H : 286mm ±5 V : 229mm ±5
I	**H/V. SIZE, POSI and V. PCC (2)** 3) Adjust VSR Setting	☐ Crosshatch	I1 I2 I3 I4 I5 I6 I7 I8 I9 I10 I11 IE	 HV5-1 HV5-2 HV5-3 HV5-4 	Set the cell to the menu at left and press ↵. Set the cell to the adjusting mode INTP [0] and press ↵. Check that the input signal to the monitor is [fH 29.5KHz] and [fV 48.0Hz] and press ↵. Set the cell to following items, press ↵ and make the adjustment to the value shown at right by using ← and →. ① H. SIZE ② H. POSI ③ V. SIZE ④ V. POSI ⑤ V. PCC ⑥ V. LIN (S) After adjusting the above, return to menu of I2 by using E. Input signal [fH 39.0KHz] and [fV 77.1Hz] Select Adjusting mode INTP [1], and repeat above procedure. Input signal [fH 54.0KHz] and [fV 105.0Hz] Select Adjusting mode INTP [2], and repeat above procedure. Input signal [fH 70.0KHz] and [fV 165.0Hz] Select Adjusting mode INTP [3], and repeat above procedure. After adjustment, return to the main menu by press E.	 H : 300mm ±5 V : 225mm ±5 H/V Posi : Center V. PCC : V. LIN : Best point

	ITEM Program Menu	◇ Test Meter ▼ Test Point ☐ Pattern	JOB CODE	Input Signal	Operation	Adjusting Value
J	**CRT CUT-OFF**	◇ TV Color Analyzer II	J1		Set the Contrast to MAX, Brightness to Center and Color is 9300k using the OSD.	
		☐ RGB Off (Sync only)	J2	Mode-2	Check that the input signal to the monitor is [fH 60.0KHz], [fV 75.0Hz] and turn off the RGB signal.	
	4) Adjust OTHER setting		J3		Set the cell to the menu at left and press ↵.	
			J4~ J11		Make the adjustment R,G and B Low Light by using ←, → and Screen VR to CRT cut-off. **Please refer to flow chart for this adjustment on page 30.**	
		☐ 16 gradation grayscale	J12		Change to the pattern at left.	
			J13		Adjust the screen VR so the 2nd level of gray appears slightly.	
	BRIGHTNESS COLOR ADJUST	☐ White window (5cm×5cm at center)	J14		Change to the pattern at left.	
			J15		Move the cell to the following items and make the adjustment to the value shown at right by using ← and →. R. SUB CONT 9300K G. SUB CONT 9300K B. SUB CONT 9300K	Y=120 cd/m^2 x=0.281 ±0.15 y=0.311 ±0.15
			J16		Set Contrast to MIN using the OSD.	
			J17		Move the cell to the following items and make the adjustment to the value shown at right by using ← and →. R. LOW LIGHT 9300K G. LOW LIGHT 9300K B. LOW LIGHT 9300K **Adjust two colors only out of above three as shown in (J11) on page 30.**	x=0.281 ±0.15 y=0.311 ±0.15
	ABL	☐ White flat field (full window)	J18		Change to the pattern at left.	
			J19		Move the cell to ABL 9300K and make the adjustment to the value shown at right by using ← and →.	Y=110 cd/m^2
			J20		Press ↵ to return to main menu.	
	1.0V ADJUST 8) Special ADJUST	☐ White window (5cm×5cm at center) 1.0V p-p video*	J21		Change to the pattern at left.*	
			J22		Set the cell to the menu at left and press ↵.	
			J23		Select the 1:VIDEO 1.0Vpp ADJUST from the menu.	
			J24		Set Input Video Level 1.0V using the OSD of the monitor.	Y=120 cd/m^2
			J25			
			J26		Make the adjustment to the value shown at right by using ← and →.	
			JE		Press ↵ to return to menu of J19, press ↵ to return to the main menu.	
	Should make Final Tune after this adjustment refer to item L on page 31.					

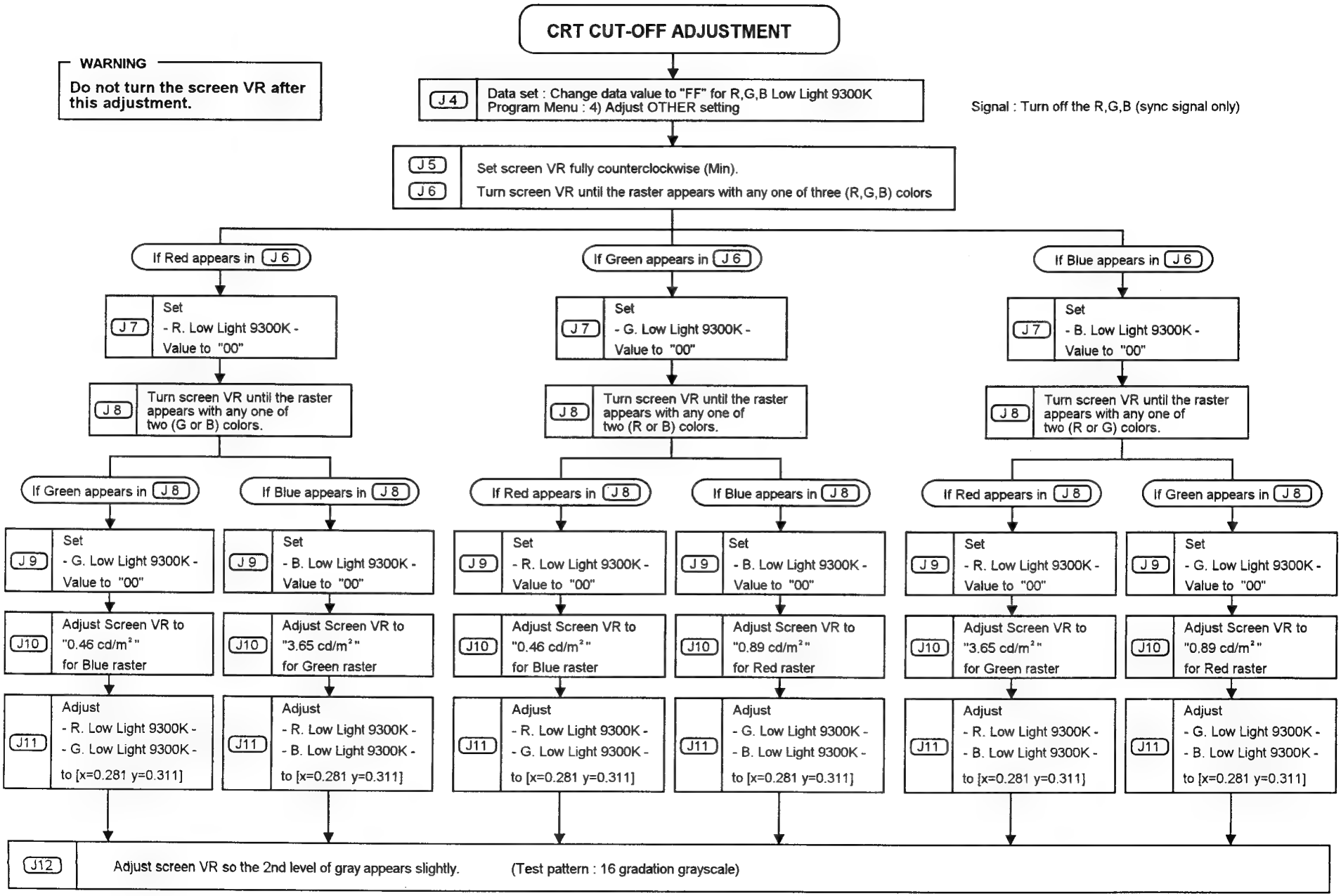

CRT CUT-OFF ADJUSTMENT

WARNING

Do not turn the screen VR after this adjustment.

J4 — Data set : Change data value to "FF" for R,G,B Low Light 9300K
Program Menu : 4) Adjust OTHER setting

Signal : Turn off the R,G,B (sync signal only)

J5 — Set screen VR fully counterclockwise (Min).
J6 — Turn screen VR until the raster appears with any one of three (R,G,B) colors

If Red appears in J6

J7 — Set - R. Low Light 9300K - Value to "00"

J8 — Turn screen VR until the raster appears with any one of two (G or B) colors.

If Green appears in J8

J9 — Set - G. Low Light 9300K - Value to "00"

J10 — Adjust Screen VR to "0.46 cd/m²" for Blue raster

J11 — Adjust - R. Low Light 9300K - - G. Low Light 9300K - to [x=0.281 y=0.311]

If Blue appears in J8

J9 — Set - B. Low Light 9300K - Value to "00"

J10 — Adjust Screen VR to "3.65 cd/m²" for Green raster

J11 — Adjust - R. Low Light 9300K - - B. Low Light 9300K - to [x=0.281 y=0.311]

If Green appears in J6

J7 — Set - G. Low Light 9300K - Value to "00"

J8 — Turn screen VR until the raster appears with any one of two (R or B) colors.

If Red appears in J8

J9 — Set - R. Low Light 9300K - Value to "00"

J10 — Adjust Screen VR to "0.46 cd/m²" for Blue raster

J11 — Adjust - R. Low Light 9300K - - G. Low Light 9300K - to [x=0.281 y=0.311]

If Blue appears in J8

J9 — Set - B. Low Light 9300K - Value to "00"

J10 — Adjust Screen VR to "0.89 cd/m²" for Red raster

J11 — Adjust - G. Low Light 9300K - - B. Low Light 9300K - to [x=0.281 y=0.311]

If Blue appears in J6

J7 — Set - B. Low Light 9300K - Value to "00"

J8 — Turn screen VR until the raster appears with any one of two (R or G) colors.

If Red appears in J8

J9 — Set - R. Low Light 9300K - Value to "00"

J10 — Adjust Screen VR to "3.65 cd/m²" for Green raster

J11 — Adjust - R. Low Light 9300K - - B. Low Light 9300K - to [x=0.281 y=0.311]

If Green appears in J8

J9 — Set - G. Low Light 9300K - Value to "00"

J10 — Adjust Screen VR to "0.89 cd/m²" for Red raster

J11 — Adjust - G. Low Light 9300K - - B. Low Light 9300K - to [x=0.281 y=0.311]

J12 — Adjust screen VR so the 2nd level of gray appears slightly. (Test pattern : 16 gradation grayscale)

	ITEM Program Menu	◇ Test Meter ▼ Test Point ☐ Pattern	JOB CODE	Input Signal	Operation	Adjusting Value
K	**FOCUS**	☐ Character	K1 K2 K3 K4	MODE-2	Check that the input signal to the monitor is [fH 60.0KHz] and [fV 75.0Hz]. Make the corner sections of the screen optimum by turning D-FOCUS VR on the FBT. Make the the center section optimum by turning S-FOCUS VR on the FBT. Repeat K2 and K3 to make it optimum.	
L	**FINAL TUNE** 8) Special ADJUST		L1 L2

2. Purity adjustment

The CRT is an ITC assembly, however, here is the explanation for readjustment just in case.

If color shading is apparent, make the following adjustment.

2.1.

(1) Verify that no unusual magnetic fields are near the Display unit (magnetic screwdrivers, table magnets, etc.). If possible, use a wooden workbench for this procedure.
(2) Degauss the magnetism of chassis and CRT with external degaussing coil.
(3) Adjust the purity magnet until each of the red, green and blue channels is free of color shading.

Make the following adjustment if color shading cannot be corrected by the above, or if the CRT or deflection yoke has been replaced.

2.2.

(1) Keep the convergence yoke and deflection yoke in the positions shown below.

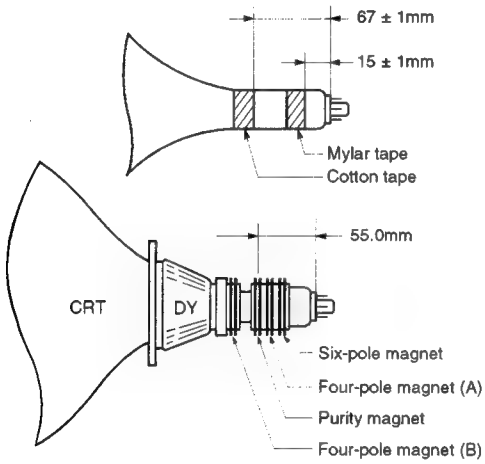

CY tightening torque: 8^{+2}_{-1} kgf·cm
DY tightening torque: 18 ±2 kgf·cm

(2) Make sure that this adjustment is done later than 30 minutes after power on.
(3) Degauss the magnetism of chassis and CRT with an external degaussing coil.
(4) Verify that static convergence is roughly matched. If it is misaligned, adjust static convergence of Red color and Blue color with Four-pole magnet A.
For this adjustment Four-pole magnet B which is with deflection yoke must be put together.
(5) Remove the wedge from the deflection yoke, and pull the deflection yoke fully to the front.
(6) Display green color solely with the signal generator. Adjust the purity magnet so that the center of the screen displays a pure green disk. Slide the deflection yoke rearward until the four corners shaded and check its area's uniformity.

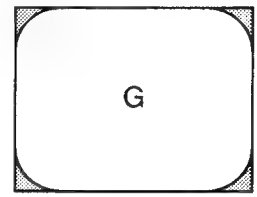

(7) After the adjustment of step 5, readjust the static convergence if some gap was found.
Static convergence alignment for this step is to be performed with Four-pole magnet A and Six-pole magnet.
(8) Display red disk. Adjust the purity magnets so as that red disk is as the center of the screen simultaneously. If red is shifted, move its position in the opposite direction.

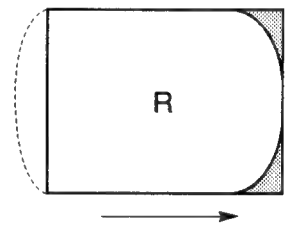

(9) Display Green again.
Slide the deflection yoke rearward until the screen appears green on the whole, and fasten it there.
(10) Confirm purity in each direction by rotating the set to direction of East, West, South, and North after degauss by external degaussing coil.
(11) If magnetism remains even after the adjustment, use the compensation magnet to obtain purity.

The final confirmation method for purity

In the natural magnetic field, rotate the monitor in the direction of East, West, South and North.

Earth's magnetic field may cause magnetism on the monitor. Confirm that the automatic degaussing circuit built in the monitor can erase the amount of magnetism which was introduced with above rotation.

3. Convergence adjustment

The CRT is an ITC assembly, however, here is the explanation for readjustment just in case.

(1) Make sure that this adjustment is done later than 30 minutes after power on. Check general ability coarse adjustment and purity adjustment finished.
(2) Degauss the magnetism of chassis and CRT with degaussing coil. (CRT board also)
(3) Apply mixed crosshatch signals of red and blue from the signal generator. Nudge the deflection yoke to equal its inclination up and down, right and left with a temporary wedge between CRT and the top of the yoke.
(4) Match the red and blue images at the center of the screen by rotating the Four-pole magnet A (See STEP-1 in figure for examples). For this adjustment Four-pole magnet A should be put together.
(5) Apply mixed crosshatch signal of red, blue and green from the signal generator.
(6) Match the red, green and blue images at the center of the screen by rotating the Six-pole magnet. (See STEP-2 in figure for examples)
(7) If lines are twisted either lefthand or righthand (See the STEP-3 in figure for examples) perform the following:
   a. Use Four-pole magnet B to shift convergence of horizontal lines by 5 to 6 mm at the center of the screen. (For twisted lefthand lines, shift blue line downward and red line upward. For twisted righthand lines, shift red line downward and blue line upward. Do not shift convergence of vertical lines.)
   b. Then realign convergence with Four-pole magnet A.
(8) Loosen the deflection yoke fastening screw and gently nudge the yoke up and down to achieve the best overall convergence on the edges of the screen (See STEP-4 in figure for examples).
   Insert wedge at the top of the deflection yoke so that the convergence will not deviate due to an unsteady deflection yoke.
(9) Gently nudge the yoke from side to side to achieve the best overall convergence on the edges of the screen (See STEP-5 in figure for examples).
   Insert wedges at the left side and right side of the deflection yoke so that the convergence will not deviate due to an unsteady deflection yoke. (Do not apply silicon adhesive to the wedges to prevent them from slipping out).
(10) Check that the image is horizontal.
   If needed, rotate the deflection yoke.
(11) Recheck the purity adjustment. If purity was adversely affected repeat the purity adjustment, then recheck convergence when finished.
(12) Retighten the deflection yoke fastening screw. Do not overtighten the screw, as this can damage the CRT.
   Tightening torque: 18 ±2 kgf·cm
(13) Align the horizontal line convergence at the center of the screen with the Differential coil (See STEP-6 in figure for examples).
(14) Align the horizontal line convergence at the corner and of the screen with the Differential resistor VR-YV. (See STEP-7 in figure for examples).
(15) Align the center vertical line convergence at the corner of the screen with the Vertical Isotropic Astigmatism resistor VR-YH (See STEP-8 in figure for examples).
(16) Recheck convergence at the center of the screen. If needed, realign with the Four-pole magnet A and the Six-pole magnet.
(17) Insert wedges as shown in STEP-9 of figure (at the top, bottom, and right side of the deflection yoke). Secure them with silicon adhesive and polyester tape. Remove any temporary wedges while keeping convergence aligned.
(18) If the convergence on the fringe areas in still not acceptable, place one or more Permalloys around the funnel to achieve the best effect. Then press these Permalloys onto the funnel. Verify convergence around all edges of the screen. (See STEP-10 in figure for examples).

NOTE

In the above step, do not place the Permalloys closer than 20 mm from the HV anode cap. Do not tape them over any paper labels or secure them with silicon adhesive.

(21) After completion of adjustment, apply locking paint to the movable portions of the deflection and convergence yokes to secure them.
(22) Make adjustment so that the value of white window pattern from the signal generator is below that under the condition of 100 cd/m² brightness at the standard condition.

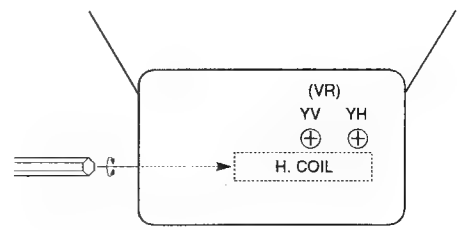

Adjustment part	Misconvergence pattern Wedge inserting position
Four-pole magnet A	**STEP-1** 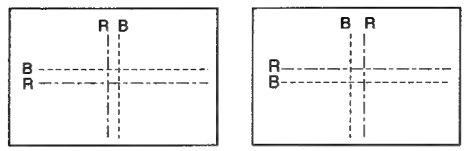
Six-pole magnet	**STEP-2** 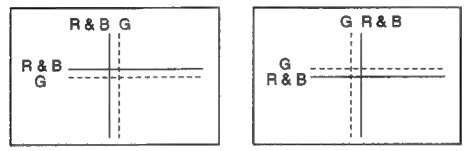
Four-pole magnet B	**STEP-3** 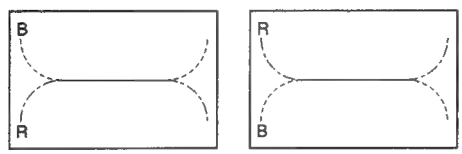 Beams are twisted lefthand Beams are twisted righthand for example (lefthand) 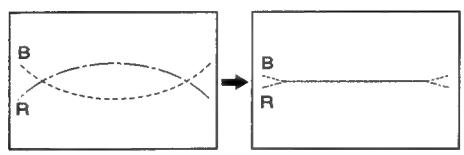 with four-pole magnet B with four-pole magnet A
Deflection yoke	**STEP-4** 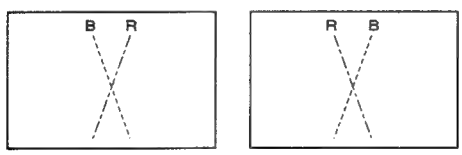 Tilting the yoke up Tilting the yoke down 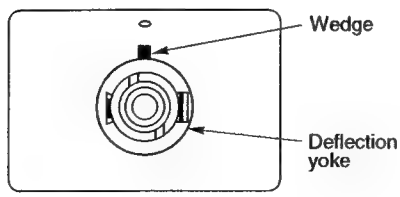 Rear view of the CRT

Adjustment part	Misconvergence pattern Wedge inserting position
Deflection yoke	**STEP-5** 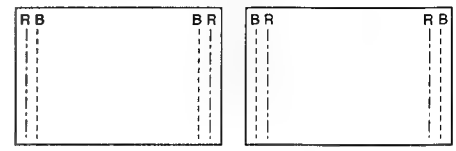 Tilting the yoke left Tilting the yoke right 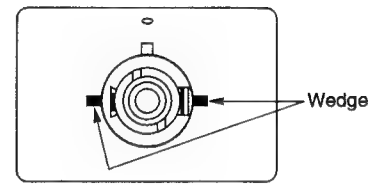 Rear view of the CRT
Differential coil	**STEP-6** 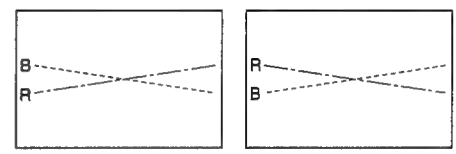
Differential resistor VR-YV	**STEP-7** 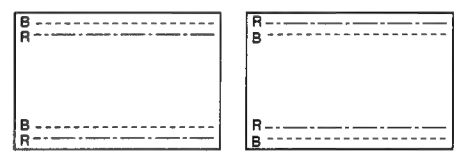
Differential resistor VR-YH	**STEP-8** 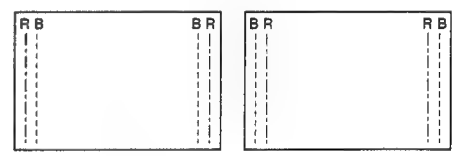
	STEP-9 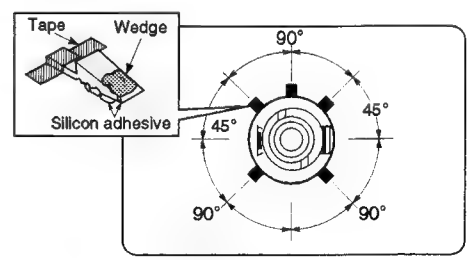 Wedge spacing and how to tape
Permalloy	**STEP-10** 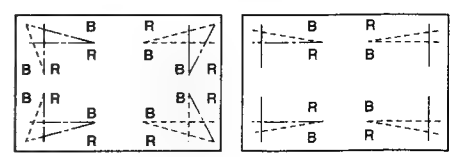

CHECK ITEM

These items are intended for a recheck after adjustment and for a check of the following function operations:

1. Resolution check
2. Brightness variation check
3. Gradation check
4. Brightness check
5. Deflection linearity check
6. Distortion check
7. Image stability check
8. Blinking image check
9. Circuit operation check
10. Specific function check
11. Power save function check

1. Resolution Check

(1) Apply resolution check pattern.

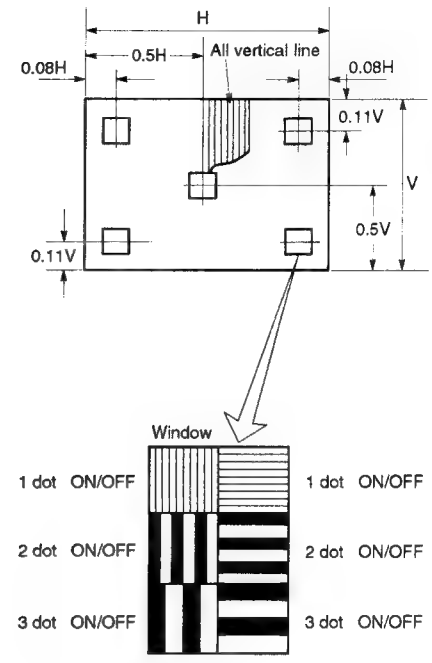

(2) Check with the normal signal and inverted signal. Check to be sure that display color between dots is uniform and that there are no color difference and spotty display color.

(3) Check the entire image quality including resolution.

2. Brightness Variation Check

(1) Cause the white full dot pattern to be displayed with the standard condition.

(2) Set the contrast to a maximum.
Set the brightness to the center.

(3) Make sure that a brightness difference between the center and periphery is <70 % with the horizontal magnetic field in the condition of ±30 μT.

3. Gradation Check

(1) Cause the 16 grayscale to be displayed with the standard condition. (White gradation waves.)

(2) Set the contrast to a maximum and the brightness to the center.

(3) At this time, the 1st gradation (black level) cannot be seen and the 2nd gradation must be barely lit.

(4) With the brightness set to the center, vary the contrast from the maximum point the gradation tracking must be good at that time.

Note: If tint (particularly the gray, which is a middle color) is different, make adjustment of the white balance once again.

(5) With the contrast set to a maximum, vary the brightness from the maximum point to the minimum point and check to be sure that the brightness of the low gradation portion changes.

Note: Check both the color select 9300K and 6550K.

4. Brightness Check

(1) Cause the white full-flat field pattern to be displayed with the standard condition.

(2) Make sure that the brightness value is < 26 cd/m² when the contrast is set to a minimum and the brightness to the center.

5. Rotation Check

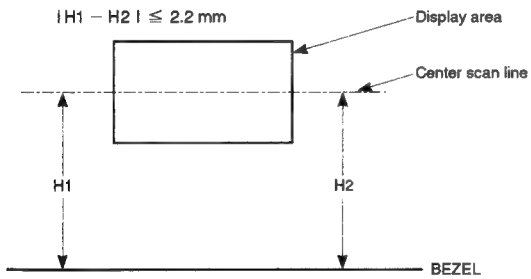

6. Linearity Check

$$\text{Horizontal linearity} = \frac{X_{max.} - X_{min.}}{X_{max.} + Y_{min.}} \times 100\% \leqq 7\%$$

$$\text{Vertical linearity} = \frac{Y_{max.} - Y_{min.}}{Y_{max.} + Y_{min.}} \times 100\% \leqq 6\%$$

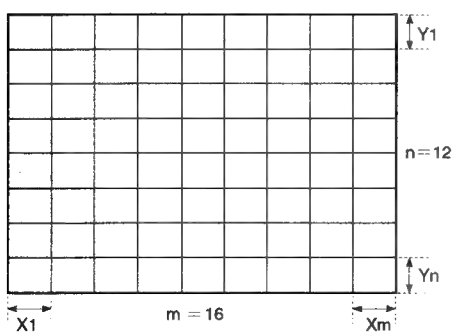

<Conditions>

Display image ---- crosshatch pattern

Maximum and minimum values should not be adjacent to each other.

X max. is maximum value among X1 ~ Xm.

X min. is minimum value among X1 ~ Xm.

Y max. is maximum value among Y1 ~ Yn.

Y min. is minimum value among Y1 ~ Yn.

7. Distortion Check

(1) Apply the signal of the following mode and supply the green crosshatch pattern.

Mode-1

Mode-2

Mode-3

(2) Make sure that each value comes within the value indicated above.

• Distortion TRAPEZOID

$$\frac{AC - BD}{AC + BD} \times 100 \leq 1.0\ \%$$

$$\frac{AB - CD}{AB + CD} \times 100 \leq 1.0\ \%$$

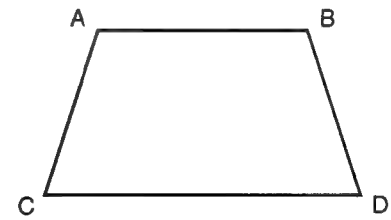

• Pincushion and barrel

| C1 |, | C2 | ≤ 2.5 mm

| d1 |, | d2 | ≤ 2.5 mm

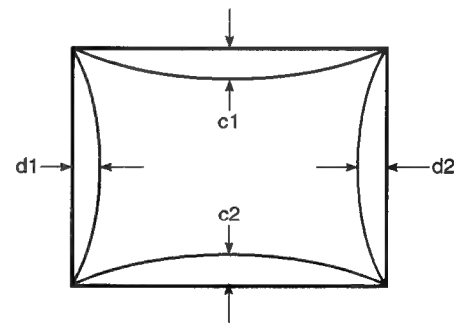

8. Image Stability Check

(1) Check to be sure that the size variations are <1.5 % when the white full dot pattern of standard condition and the AC voltage is changed to 90 ~ 264 V.

(2) Make sure that the size variations are <1.5 % when contrast is changed to a minimum from maximum at 26 ~ 110 cd/m².

9. Blinking Image Check

(1) Apply blinking pattern signal. (100%)

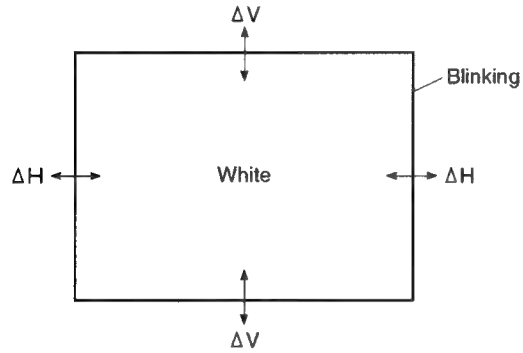

Δ H ≤ 2.0 %(MAX)
Δ V ≤ 2.0 %(MAX)

(2) Check the image stability at standard condition. Check if image changes due to blinking meets the standards above using the microscope.

10. Circuit Operation Check

(1) Check the protection operation at fH not covered in the specifications.

(2) Apply fH = 28 KHz and 71KHz signal and check to be sure that sync flows.

11. Specific Function Check

(1) Create the crosshatch pattern using the standard condition signal of the preset timing.

(2) Vary the vertical and the horizontal sizes and check to be sure that the horizontal size and horizontal position variations meet the values given below.

Vertical size	→	+/- 20 mm or more
Vertical position	→	up and down 5 mm or more
Horizontal size	→	MIN. < 280 mm MAX. > full scan
Horizontal position	→	left 40 mm or more
Horizontal position	→	right 40 mm or more

12. Power Save Function Check

The power consumption must meet the specifications when the horizontal/vertical sync signals are changed as shown below.

H. SYNC	OFF	ON	OFF
V. SYNC	ON	OFF	OFF
SPEC	< 30W	< 30W	< 8W

TECHNICAL INFORMATION FOR DDC

- It must be noted that this monitors is designed to be applicable to DDC1 communication the following points are different from ordinary monitors.
  1. Use the signal cable, the which is furnished as an accessory (applicable to DDC1) only.
  2. When replacing a PCB on which ROM for DDC1 is mounted, data writing is required.
     Proprietary interfacing and software is required for reading or writing the data, please contact 1-800-PANASYS for further information.
     In addition to the above, a computer applicable to WINDOWS and a 5V power supply unit are required.

- DDC1 Data Read/write System
  1. Communication jig
     (1) The composition of Communication jig
     ① Interface PCB. ② Adapter cable (D-SUB 25P → 9P) ③ 15P D-SUB cable

     (2) Connection diagram for communication jig.

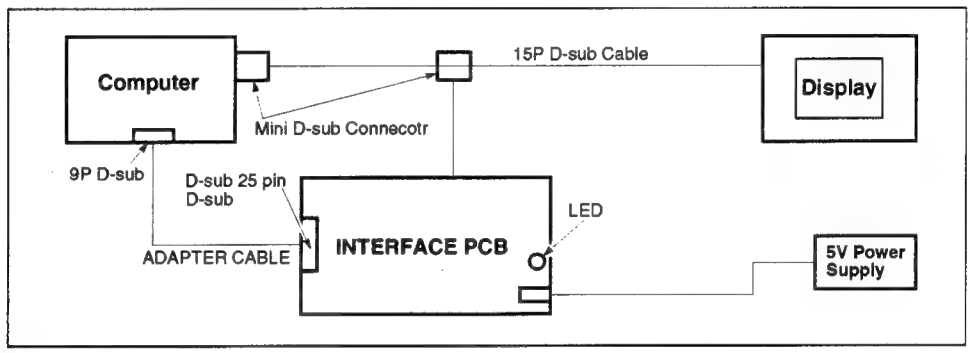

     (3) Procedure to turn on the power:
     ① Make connections as shown above.
     ② Turn on the computer.
     ③ Turn on the power supply of communication jig.
     ④ Turn on the power supply of the MONITOR.
     (Note) If the above-mentioned operation is normal, LED of the communication jig turns green after step (4).
     If this LED is red, repeat the steps (3) and (4).

     (4) Confirmation of DDC mode
     LED is mounted on the communication jig. According to its color, the DDC mode can be discriminated.
     - When LED is green. DDC1 mode.
     - When LED is orange. DDC2B mode.
     - When LED is red. Transmission error.
     - When LED is not lit. Obsolete.

  2. Preliminary arrangements for using DDC data read/write software
     (1) Copy DDC WRITE. EXE from floppy disk to hard disk drive (Name: ＼PanaTool Directory).
     (2) Register DDC data read/write software (DDCWRITE.EXE) in the Icon.
     ① Click the menu bar "Icon" of the program manager.
     ② Select "register and group create" from the pull down menu.
     ③ Select "group create."
     ④ Name the group PanaTool and register the group.
     ⑤ Repeat (1) and (2) again and select "Icon registration."
     ⑥ Enter "DDC1/2B" for [Title] and "Hard disk drive name: ＼PanaTool＼DDCWRITE. EXE" for [Command line]. Then select [OK]
  3. How to use DDC data read/write software.
     (1) Start of DDC data read/write software.
     Double-click the "DDC1/2B" Icon in the PanaTool group.
     (2) Meaning of a button displayed.
     The tool bar indicates the nine icons shown below.

These icons are explained, from left to right :

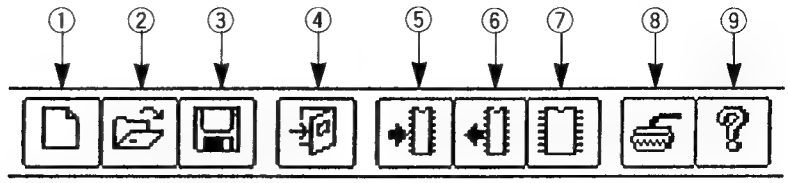

Icon ① : Initialization of screen display contents.
Icon ② : File is opened and displayed on the screen.
Icon ③ : Data are stored in a file.
Icon ④ : Finish the DDC data read/write software.
Icon ⑤ : Data displayed on the screen are written in EEPROM.
Icon ⑥ : Contents of EEPROM are displayed on the screen.
Icon ⑦ : Contents of EEPROM are compared with the data displayed on the screen.
Icon ⑧ : Communication port setting.
Contents of setting : PORT → Using Communication port No.
Baud rate → 9600, Data → 8 bits, Parity → Nil, Stop → 1 bits
Icon ⑨ : Version information display.

(3) Using the tool bar explained in (2) above, write data in EEPROM and make operations of reading, etc. A pop-up window may be displayed on the way. In such a case, select a proper one according to the message.

(Example 1) EEPROM data are displayed on the screen.
① Click the loon (6th from the left) in the tool bar, with the arrow pointing from the memory chip.
② Decided whether reading is started in DDC1 mode or DDC2B mode.
③ Select START.

(Example 2) Data displayed on the screen are written in EEPROM.
① Click the icon (5th from the left) in the tool bar, with the arrow pointing toward in the memory chip.
② Select START.

SCHEMATIC DIAGRAM FOR INTERFACE

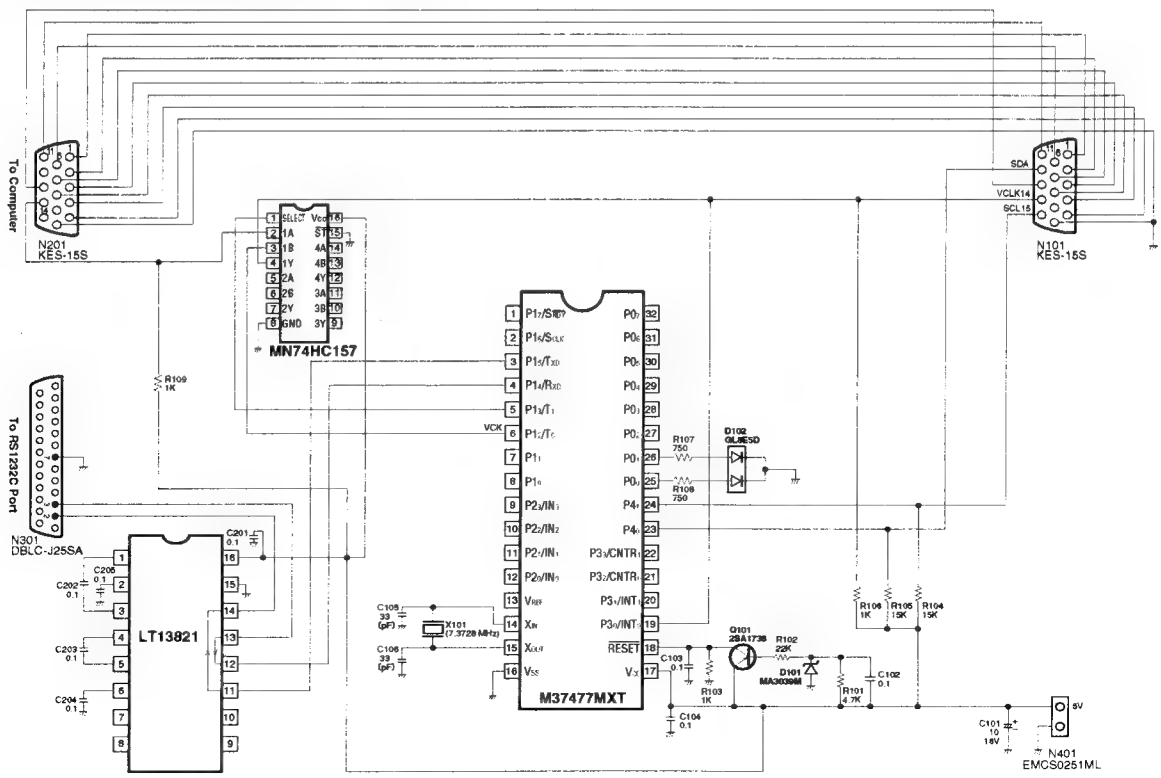

- **Data Management**

If the main PCB has been replaced, the data of the replaced PCB must be rewritten. The data rewriting procedures are as follows:

(1) Connect the communication cable for DDC to the defective PCB (15P D-SUB) and PC (9P D-SUB).
(2) Start the DDC control program.
(3) Connect the 5-V power line to IC280 (8) and GND to IC280 (4) of the defective PCB respectively.
(4) Click on ICON (6) in the window to save the data from the monitor.
(5) Click on ICON (3) to enter file names and save them on thew disk.
(6) Disconnect the 5-V power line and D-SUB connector from the defective PCB.
(7) Switch on the monitor whose main PCB has been replaced and connect the D-SUB connector back.
(8) Click on ICON (2) to enter the same file names as in step (4).
(9) Click on ICON (5) to load the data into the monitor.
(10) Click on ICON (6) and confirm that the data has been rewritten.

Connection Diagram

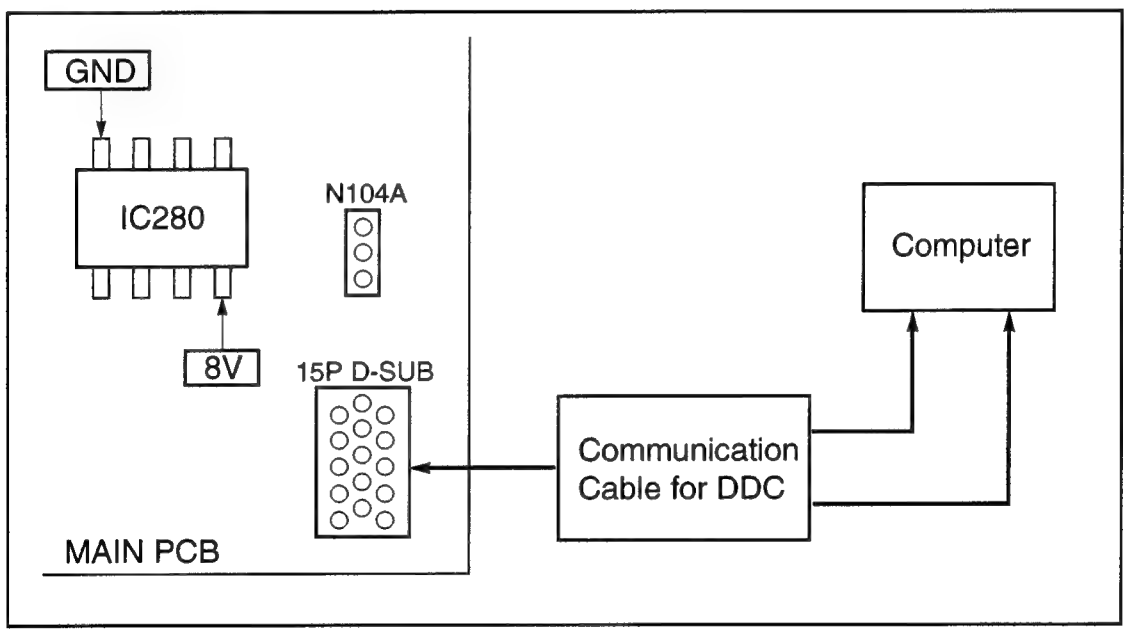

ICON

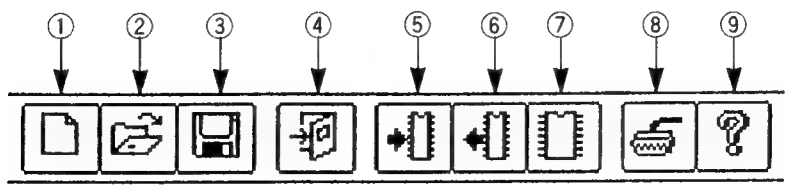

BLOCK DIAGRAM

SHEET (2) / SYNC SEPARATE / O.S.D. GENERTOR

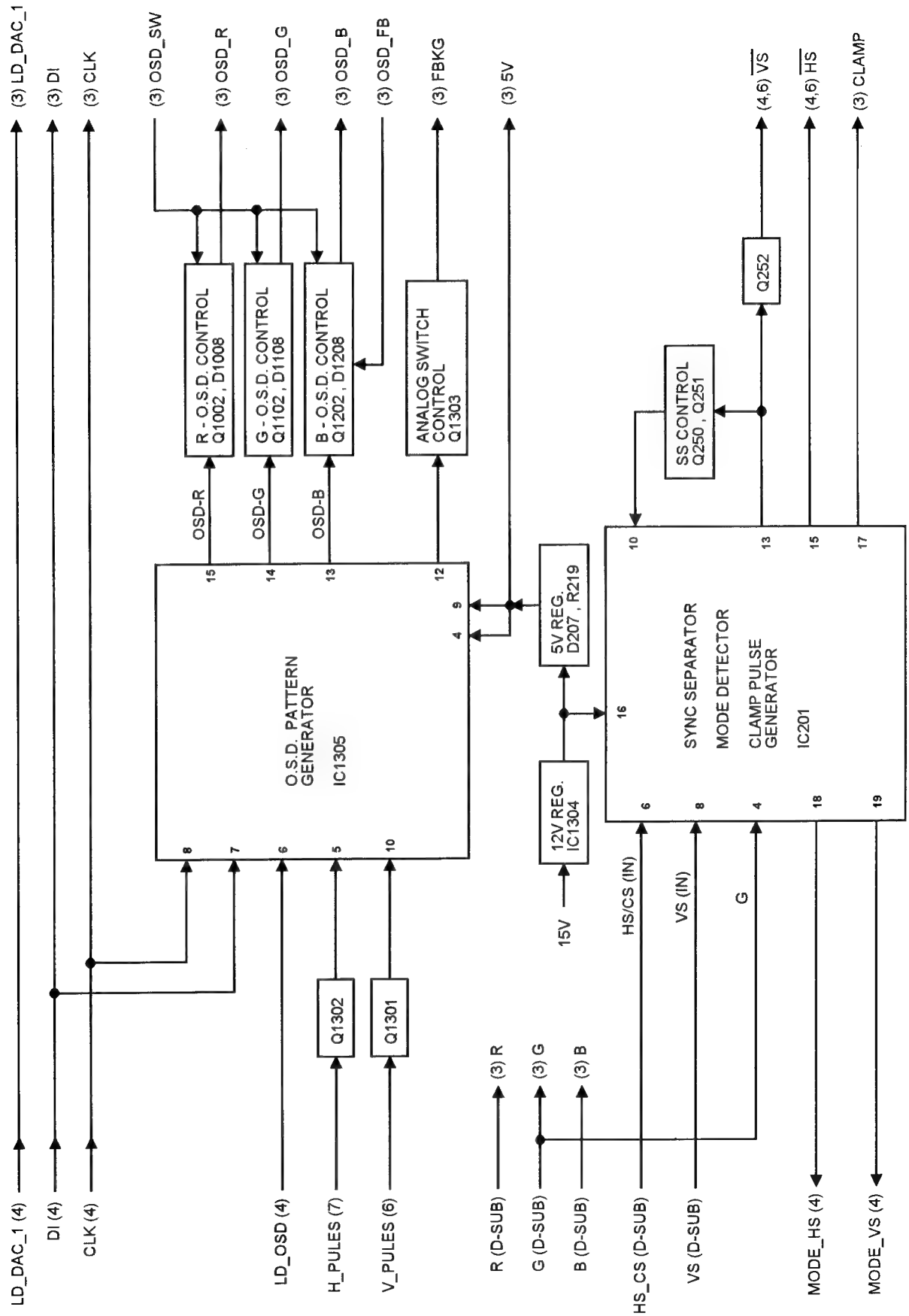

SHEET (3) / VIDEO OUT

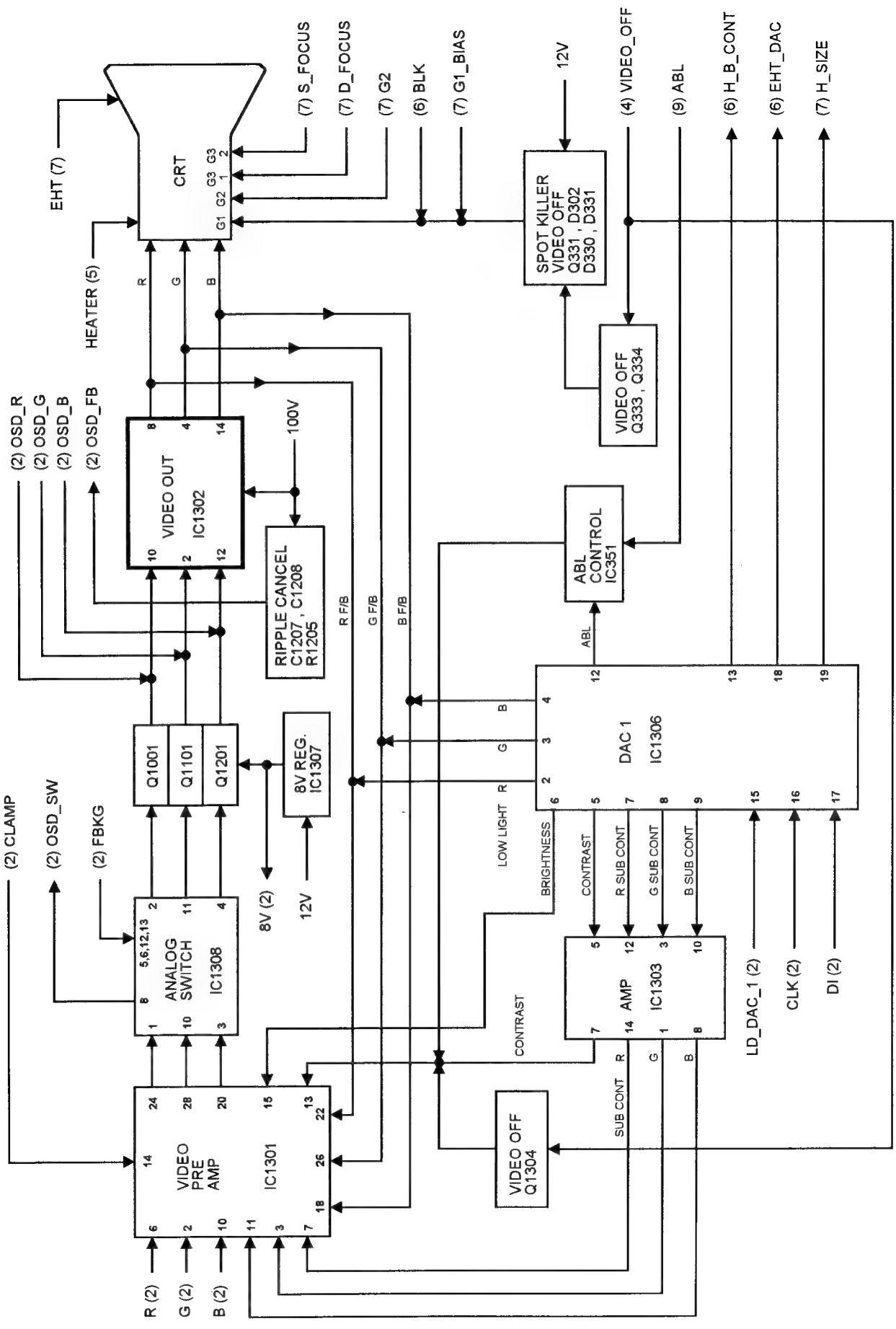

SHEET (4) / MICRO CONTROLLER / DIGITAL ANALOG CONVERTER

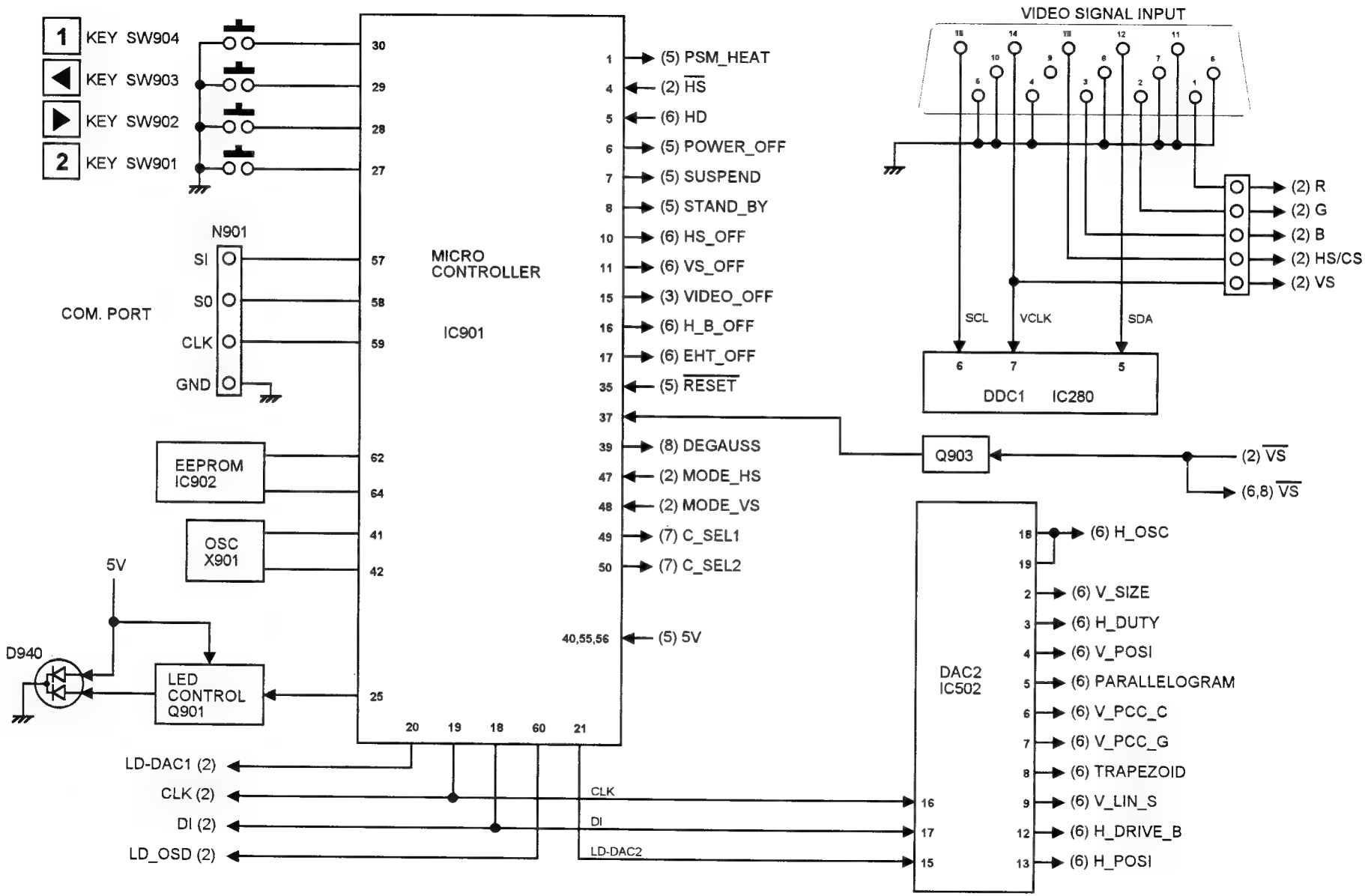

SHEET (5) / POWER SUPPLY

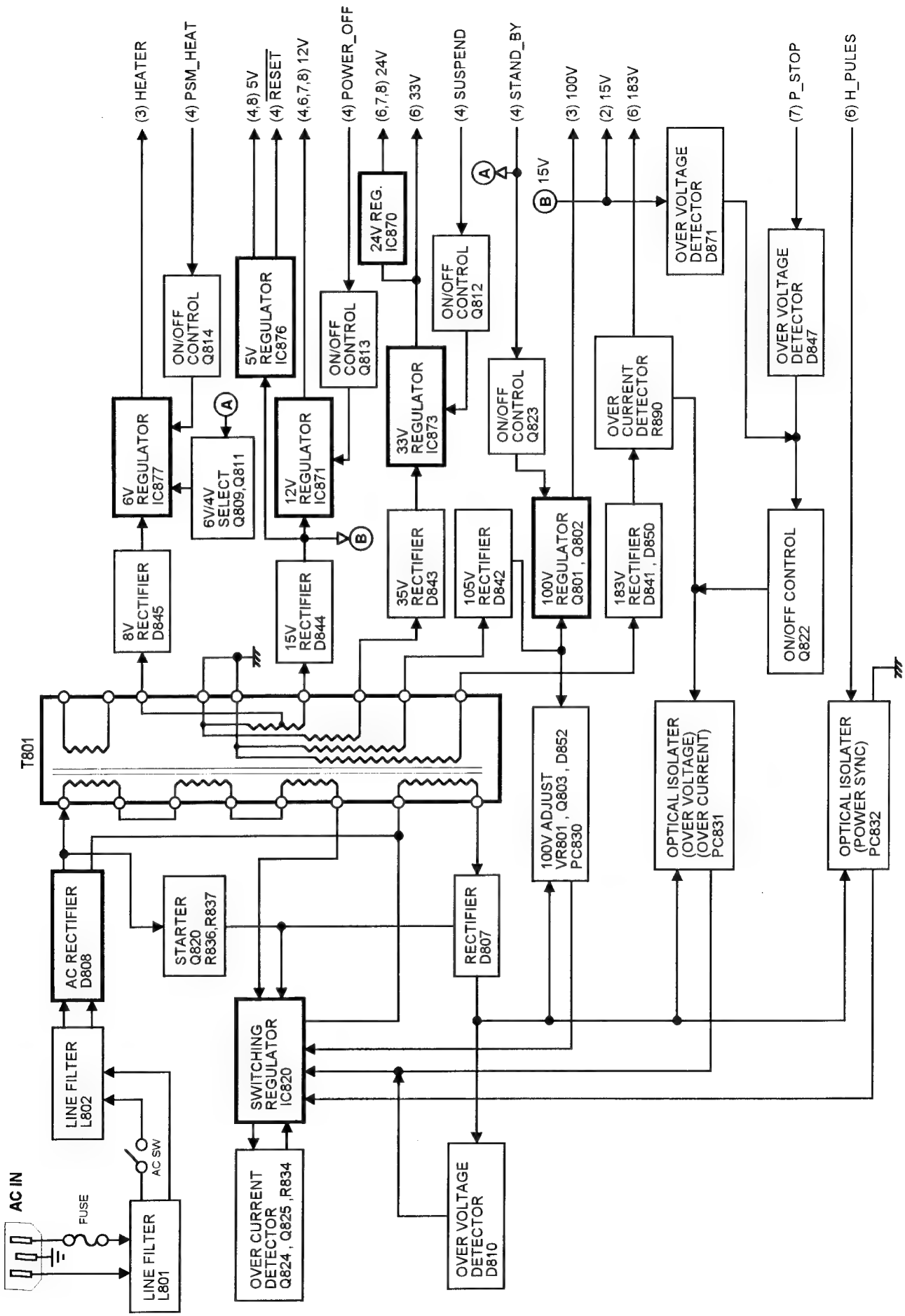

SHEET (6) / HV CONTROL / V OUT

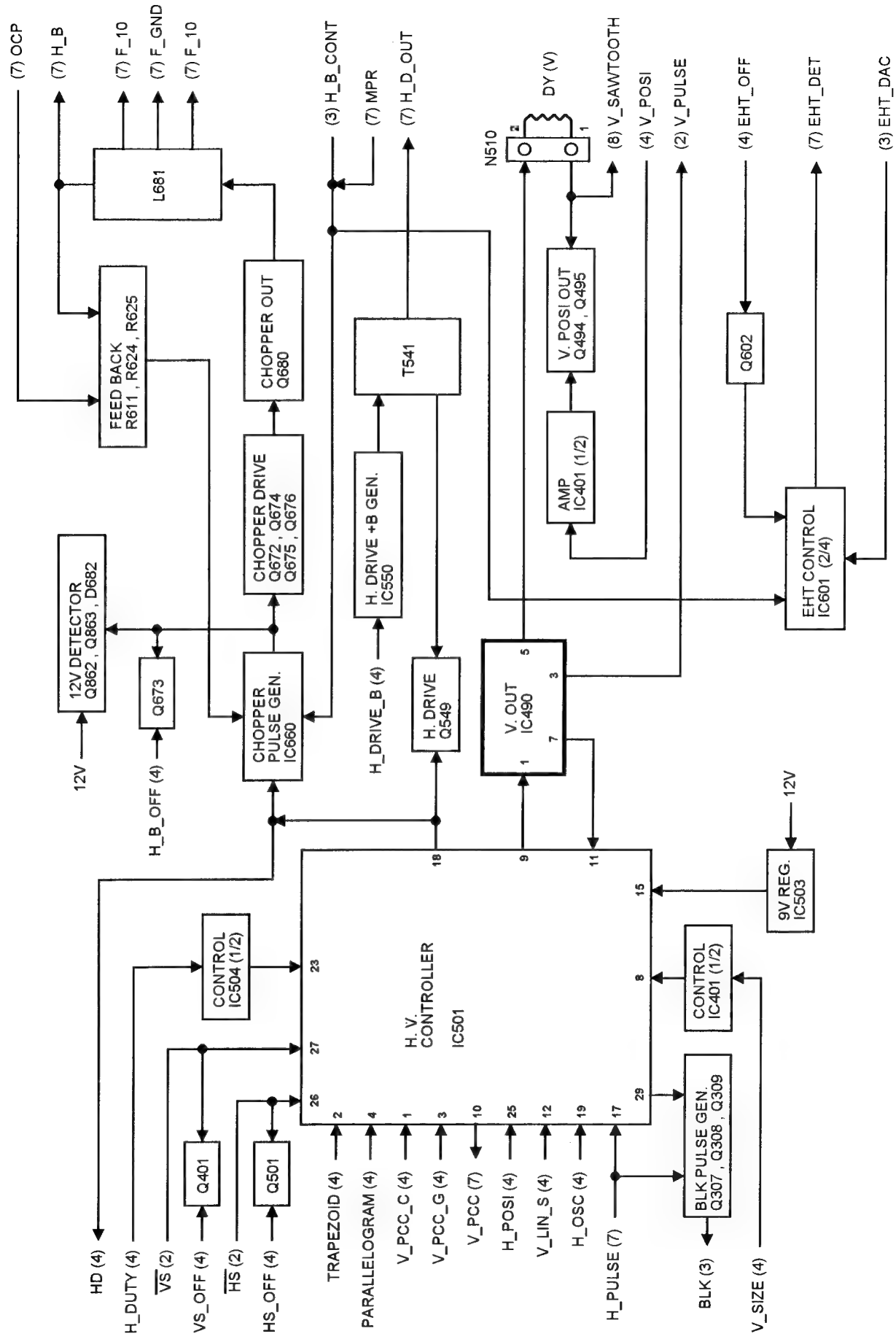

SHEET (7) / H OUT

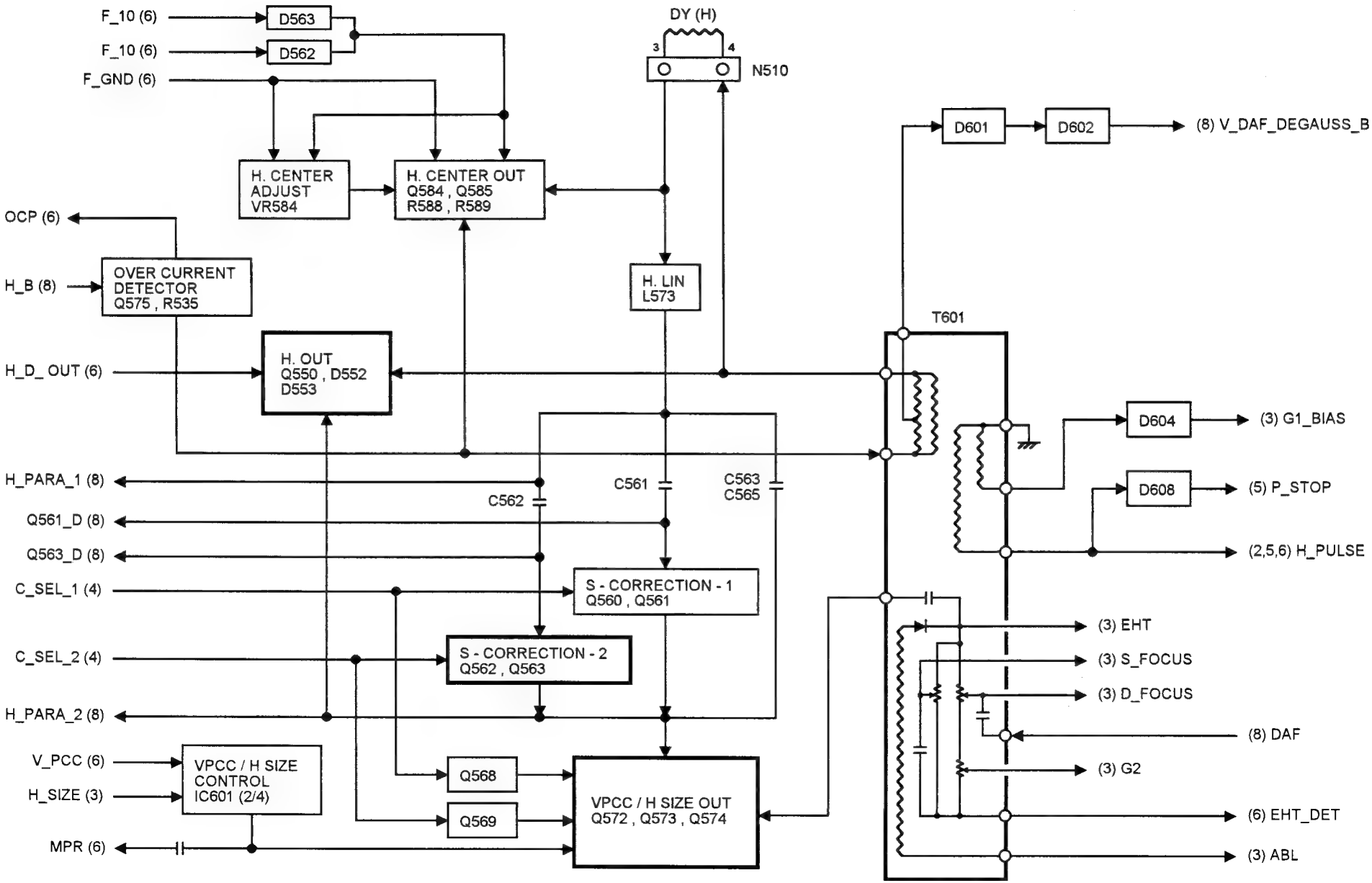
F_10 (6)
F_10 (6)
F_GND (6)
D563
D562
DY (H)
3
4
N510
H. CENTER ADJUST VR584
H. CENTER OUT Q584 , Q585 R588 , R589
OCP (6)
H_B (8)
OVER CURRENT DETECTOR Q575 , R535
H. LIN L573
D601
D602
(8) V_DAF_DEGAUSS_B
T601
H_D_ OUT (6)
H. OUT Q550 , D552 D553
D604
(3) G1_BIAS
D608
(5) P_STOP
(2,5,6) H_PULSE
H_PARA_1 (8)
C562
C561
C563 C565
Q561_D (8)
Q563_D (8)
C_SEL_1 (4)
S - CORRECTION - 1 Q560 , Q561
(3) EHT
C_SEL_2 (4)
S - CORRECTION - 2 Q562 , Q563
(3) S_FOCUS
(3) D_FOCUS
H_PARA_2 (8)
(8) DAF
V_PCC (6)
H_SIZE (3)
VPCC / H SIZE CONTROL IC601 (2/4)
Q568
Q569
VPCC / H SIZE OUT Q572 , Q573 , Q574
(3) G2
(6) EHT_DET
MPR (6)
(3) ABL

SHEET (8) / DAF OUT / DEGAUSS

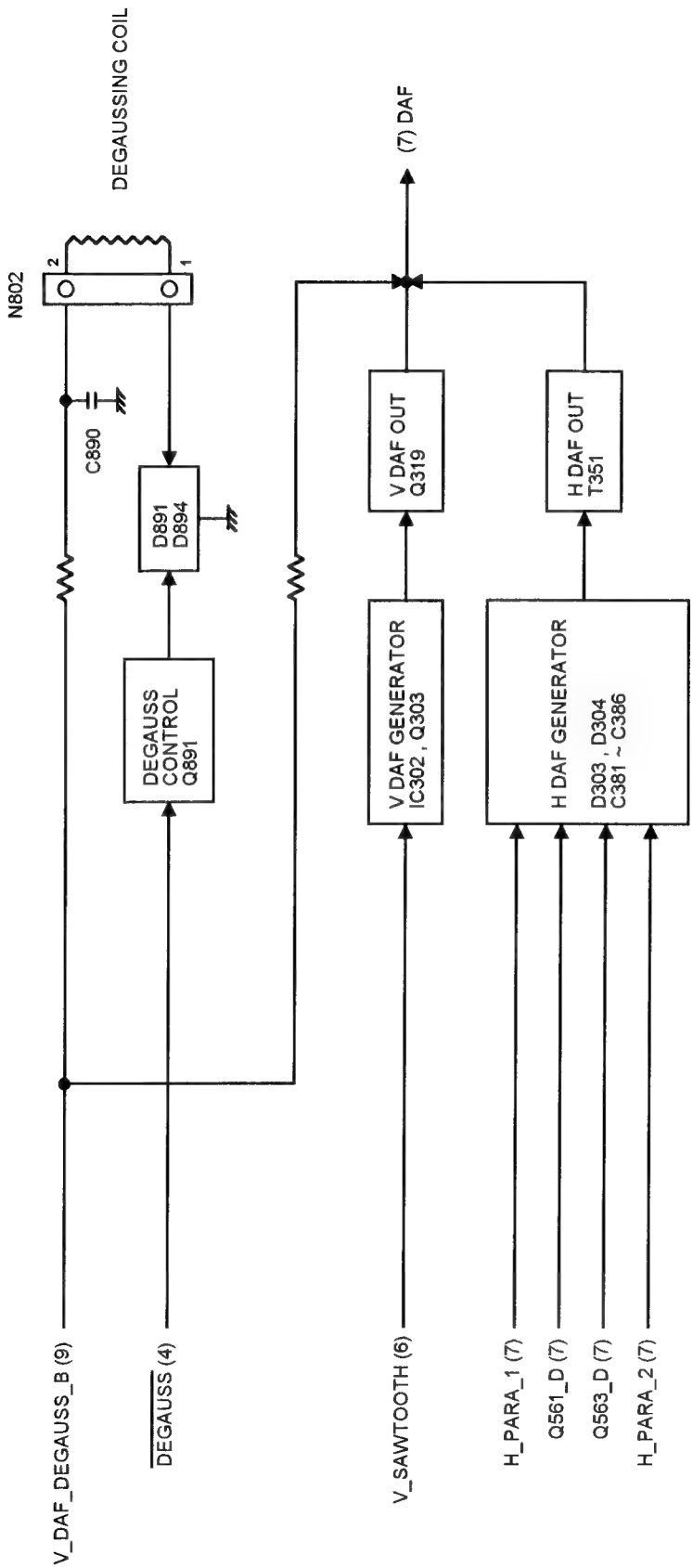

MAIN BOARD (Solder side)

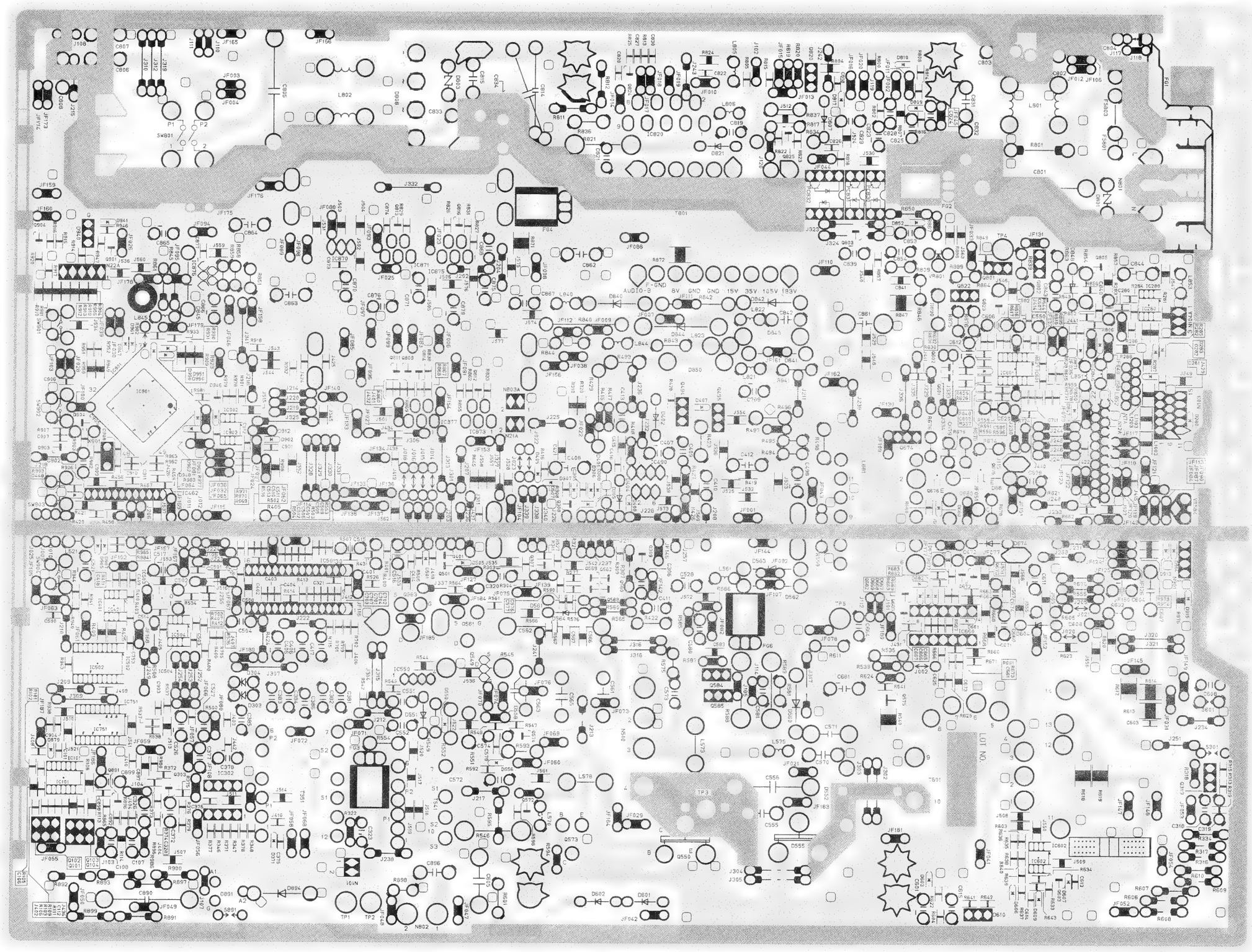

MAIN BOARD (Parts side)

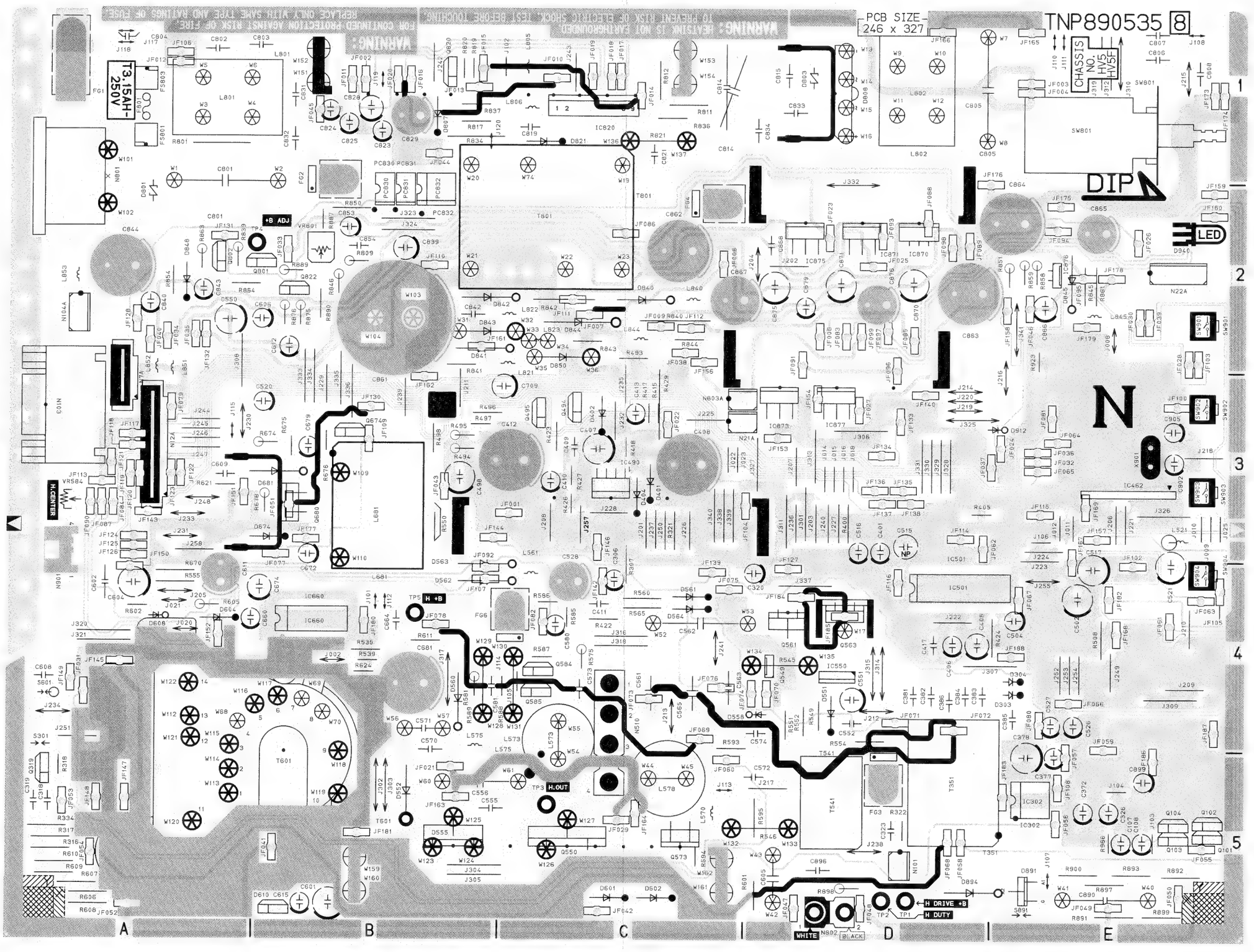

VIDEO BOARD (Solder side)

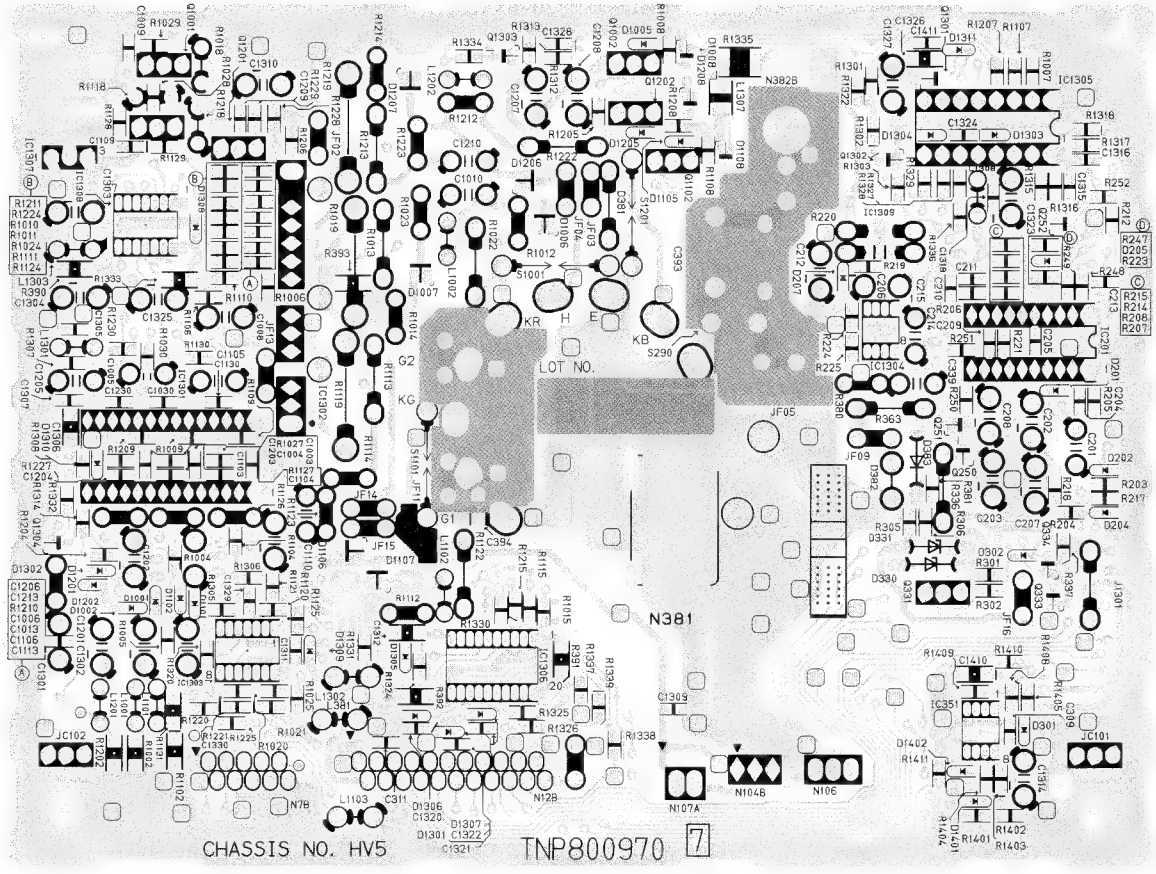

VIDEO BOARD (Parts side)

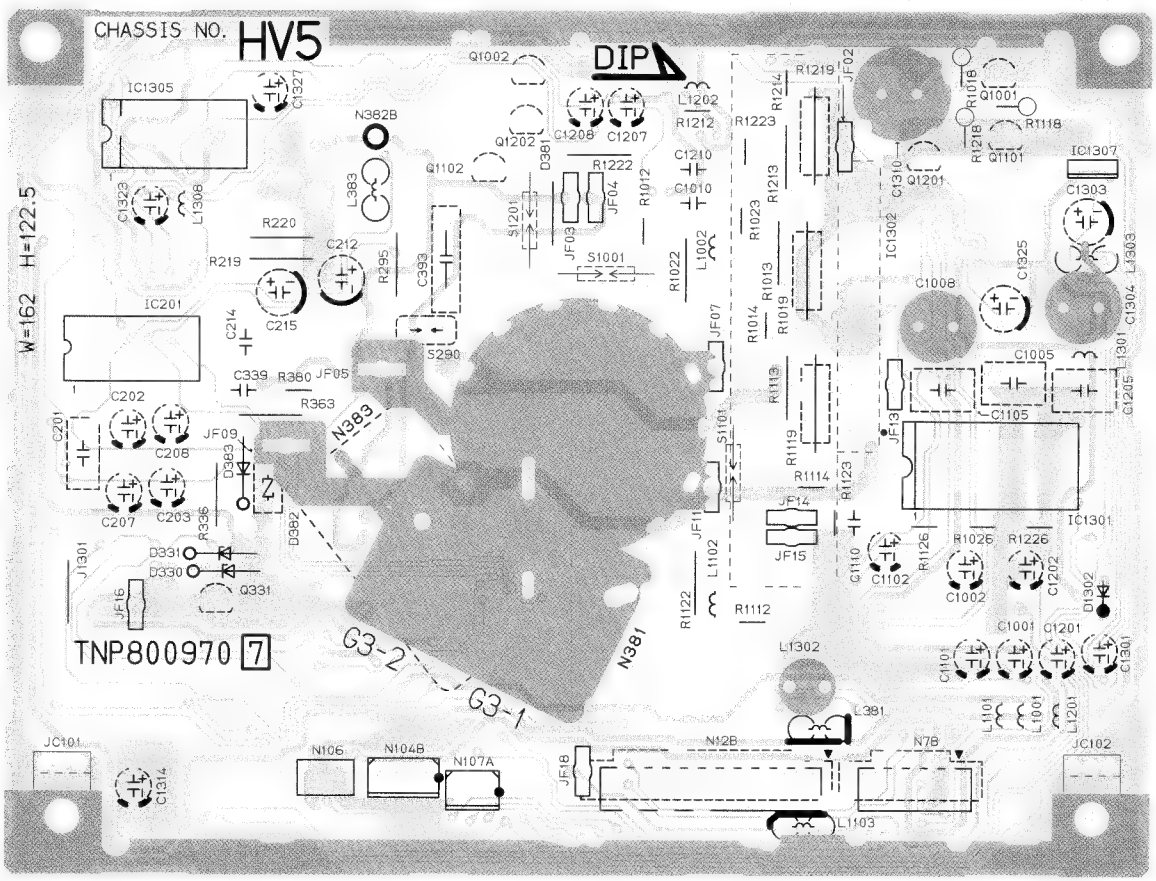

SCHEMATIC DIAGRAM

IMPORTANT SAFETY NOTICE

The component identified by shading or international symbol ⚠ on the following schematic diagrams incorporate special features important for protection from X-Radiation, fire and electrical shock hazards. When servicing it is essential that only manufacturer's specified parts be used for those critical components.

NOTES :

1. RESISTOR

All resistors are carbon 1/4W resistor, unless otherwise noted by the following marks.
Unit of resistance is ohm (Ω), (K = 1,000, M = 1,000,000)

- ◯ : Non Flammable
- ⊠ : Metal Oxide
- □ : Wire Wound
- ⊗ : Fusible
- ⊠ : Flame Proof Rectangular
- △ : Solid
- ◎ : Metal (Precision and high stability)
- : Thermistor
- : Positive coefficient Thermistor

2. CAPACITOR

All capacitors are ceramic 50V capacitor, unless otherwise noted by the following marks.
Unit of capacitance is μF, unless otherwise noted.

- : Electrolytic
- Ⓣ : Tantalum
- NP : Bipolar
- Ⓢ : Polystyrene
- ⊗ : Temperature Compensation
- Ⓜ : Polyester
- ⓜ : Metalized Polyester
- ⊠ : Polypropylene
- △ : Mica
- ◯ : Ceramic
- ◎ : Ceramic (SL)

3. COIL

Unit of inductance is μH, unless otherwise noted.

4. VOLTAGE MEASUREMENT

Voltage is measured by a digital meter receiving normal signal.

5. This schematic diagram is the letest at the time of printing and is subject to change without notice.

SERVICE NOTES :

This model has a section that does not share a common ground with the power supply section. The different sections are referred to as the HOT section and the COLD section in the precautions below.

1. Do not touch the HOT section and the COLD section at the same time. You may receive an electric shock.
2. Do not short the HOT section to the COLD section. This could blow the fuse or damage parts.
3. Never measure the HOT section and the COLD section at the same time when using tools such as oscilloscopes or multimeters.
4. Always unplug the unit before beginning any operation such as removing the chassis.

SCHEMATIC DIAGRAM

CHASSIS No. : HV5

CHASSIS FAMILY No.: 17HV5

SIGNAL CABLE : TSX4515 or TSX4515-1
AC CORD ⚠ : TSX8484 or TSX8492
TSX8493 or TSX9416

TNP890535 MAIN PCB BLOCK

TNP800970 CRT PCB BLOCK

SHEET ① REV. 6A

CRT

DEFLECTION YOKE

SHEET 2
SYNC SEPARATOR
OSD GENERATOR

SHEET 3
VIDEO PRE AMP
VIDEO OUTPUT
OSD MIXING
ABL CONTROL
G1 BIAS

SHEET 9
TCO

SHEET 4
1 KEY
2 KEY
MCU
MEMORY (EEPROM)
POWER INDICATOR
GREEN
AMBER
MINI D-Sub15p
VIDEO SIGNAL INPUT
DDC1
DIGITAL TO ANALOG CONVERTER

SHEET 5
PRIMARY CIRCUIT
SWITCHING CONTROL
AC IN
POWER SW
POWER TRANSFORMER REGULATOR

SHEET 8
(MOIRE REDUCTION)
DYNAMIC FOCUS
(Z-AXIS CORRECTION)
DEGAUSSING (TCO)

SHEET 6
H-OSC
CHOPPER CONTROL
GEOMETRY CORRECTION
V-PROCESSING
V-OUTPUT
V-CENTER
EHT REGULATOR
H-DRIVE

SHEET 7
H-OUTPUT
H-CENTERING
H-LIN CORRECTION
FBT

DEBAUSSING COIL
(TILT) COIL

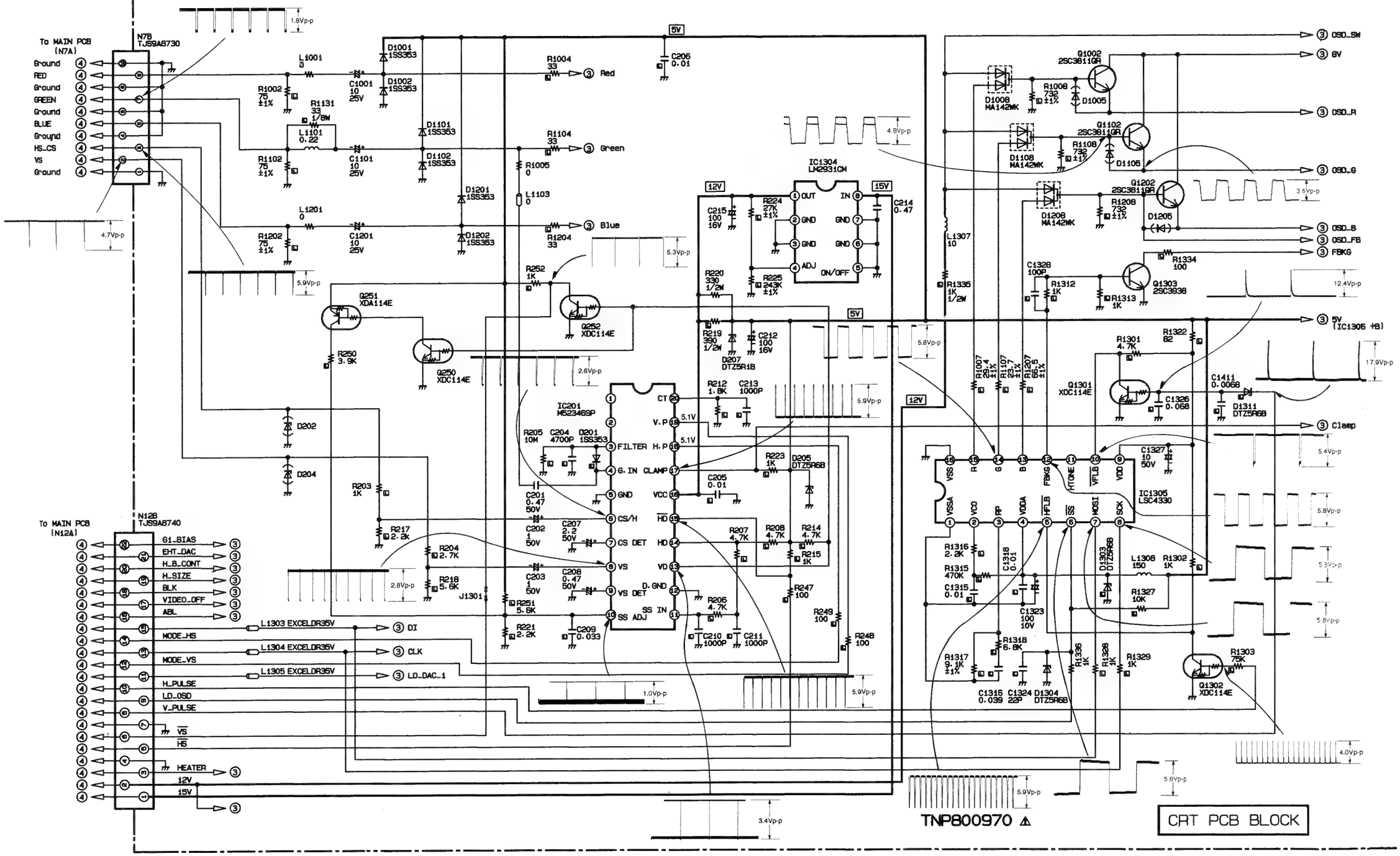
To MAIN PCB (N7A)
N7B TJS9A8730
Ground
RED
Ground
GREEN
Ground
BLUE
Ground
HS_CS
VS
Ground
To MAIN PCB (N12A)
N12B TJS9A8740
G1_BIAS
EHT_DAC
H_B_CONT
H_SIZE
BLK
VIDEO_OFF
ABL
MODE_HS
MODE_VS
H_PULSE
LD_OSD
V_PULSE
VS
HS
HEATER
12V
15V
L1303 EXCELDR35V
L1304 EXCELDR35V
L1305 EXCELDR35V
DI
CLK
LD_DAC_1
Red
Green
Blue
IC1304 LM2931CM
IC201 M52346SP
IC1305 LSC4330
Q251 XDA114E
Q250 XDC114E
Q252 XDC114E
Q1002 2SC3811QR
Q1102 2SC3811QR
Q1202 2SC3811QR
Q1303 2SC3938
Q1301 XDC114E
Q1302 XDC114E
OSD_SW
8V
OSD_R
OSD_G
OSD_B
OSD_FB
FBKG
5V (IC1306 +B)
Clamp
TNP800970
CRT PCB BLOCK

SHEET ③

TNP800970 ⚠

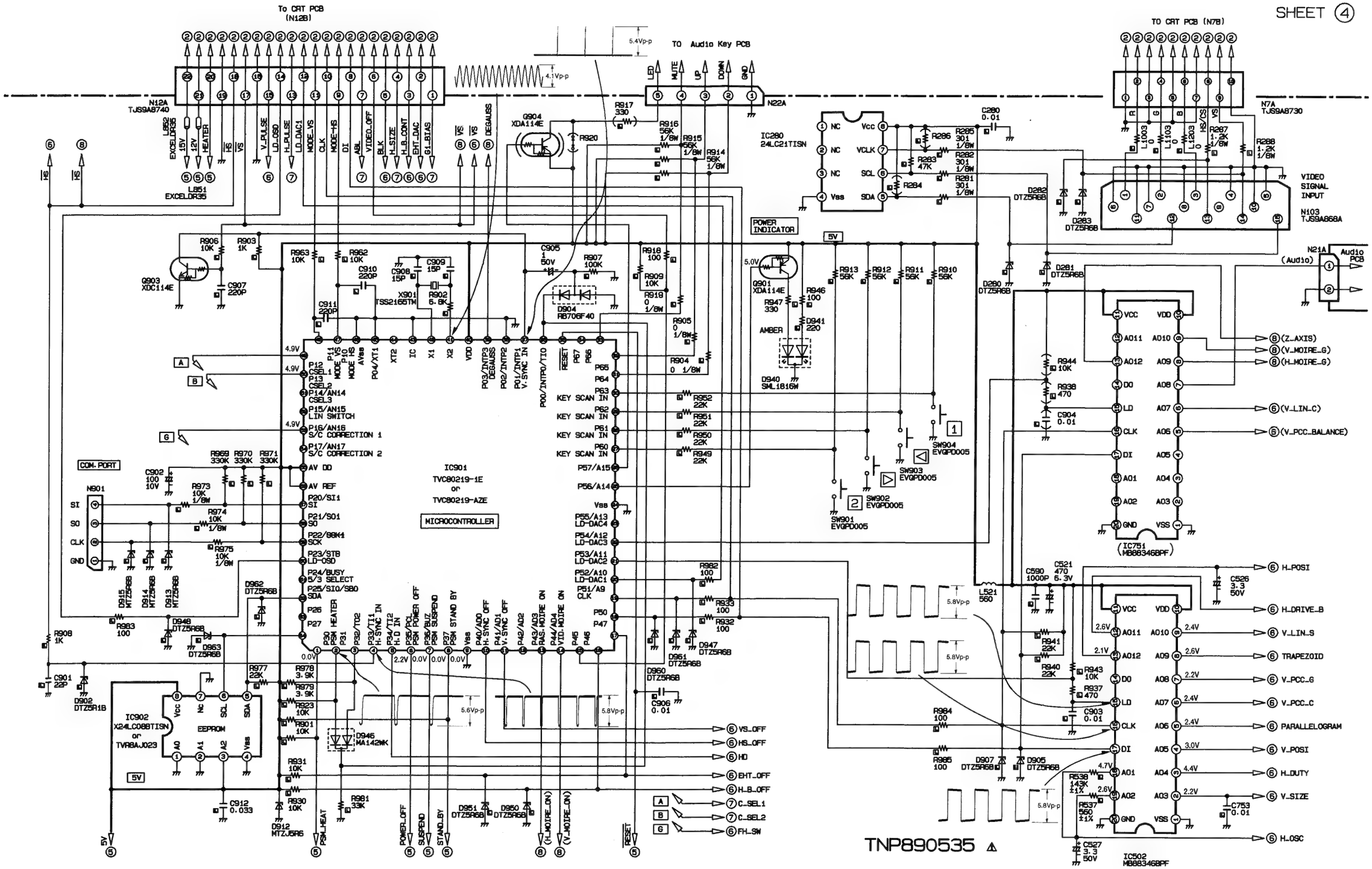
To CRT PCB (N12B)
N12A TJS9A8740
LB52 EXCELDR35 15V
12V
HEATER
HS
VS
V_PULSE
LD_OSD
H_PULSE
LD_DAC1
MODE_VS
CLK
MODE_HS
DI
ABL
VIDEO_OFF
BLK
H_SIZE
H_B_CONT
ENT_DAC
G1_BIAS
LB51 EXCELDR35
5.4Vp-p
4.1Vp-p
TO Audio Key PCB
LED
MUTE
UP
DOWN
GND
N22A
Q904 XDA114E
R917 330
R916 56K 1/8W
R915 56K 1/8W
R914 56K 1/8W
R920
IC280 24LC21TISN
C280 0.01
R286 301 1/8W
R285 301 1/8W
R283 47K
R282 301 1/8W
R284
R291 301 1/8W
TO CRT PCB (N7B)
N7A TJS9A8730
R287 1.2K 1/8W
R288 1.2K 1/8W
L1003 0
L1103 0
L1203 0
VIDEO SIGNAL INPUT
N103 TJS9A868A
D282 DTZ5R6B
D283 DTZ5R6B
D280 DTZ5R6B
D281 DTZ5R6B
N21A (Audio)
Audio PCB
POWER INDICATOR
5V
5.0V
Q901 XDA114E
R947 330
R946 100
D941 220
AMBER
D940 SML1816W
R913 56K
R912 56K
R911 56K
R910 56K
SW904 EVQPD005
SW903 EVQPD005
SW902 EVQPD005
SW901 EVQPD005
R906 10K
R903 1K
Q903 XDC114E
C907 220P
R963 10K
R962 10K
C910 220P
C908 15p
C909 15p
X901 TSS2165TM
R902 5.6K
C911 220P
C905 1 50V
R907 100K
D904 RB706F40
R918 100
R909 10K
R919 0 1/8W
R905 0 1/8W
R904 0 1/8W
R952 22K
R951 22K
R950 22K
R949 22K
R982 100
R933 100
R932 100
D947 DTZ5R6B
D961 DTZ5R6B
D960 DTZ5R6B
C906 0.01
IC901 TVC80219-1E or TVC80219-AZE
MICROCONTROLLER
P12 CSEL1
P13 CSEL2
P14/AN14 CSEL3
P15/AN15 LIN SWITCH
P16/AN16 S/C CORRECTION 1
P17/AN17 S/C CORRECTION 2
AV DD
AV REF
P20/SI1 SI
P21/SO1 SO
P22/SCK SCK
P23/STB LD-OSD
P24/BUSY S/S SELECT
P25/SIO/SB0 SDA
P26
P27
P30 PSW HEATER
P31
P32/TO2
P33/TI1 H.SYNC IN
P34/TI2 H.D IN
P35/PCL PSW POWER OFF
P36/BUZ PSW SUSPEND
P37 PSW STAND BY
P40/AD0 H.SYNC OFF
P41/AD1 V.SYNC OFF
P42/AD2
P43/AD3 RAS.MOIRE ON
P44/AD4 V.D.MOIRE ON
P45
P46
P47
P50
P51/A9 CLK
P52/A10 LD-DAC1
P53/A11 LD-DAC2
P54/A12 LD-DAC3
P55/A13 LD-DAC4
Vss
P56/A14
P57/A15
KEY SCAN IN
KEY SCAN IN
KEY SCAN IN
KEY SCAN IN
P60
P61
P63
P64
P65
RESET
P66
P67
P00/INTP0/TI0
P01/INTP1 V.SYNC IN
P02/INTP2
P03/INTP3 DEGAUSS
VDD
X2
X1
IC
XT2
P04/XT1
AVss
P10 MODE HS
P11 MODE VS
COM.PORT
N901
SI
SO
CLK
GND
C902 100 10V
R973 10K 1/8W
R974 10K 1/8W
R975 10K 1/8W
R969 330K
R970 330K
R971 330K
D915 MTZ5R6B
D914 MTZ5R6B
D913 MTZ5R6B
D962 DTZ5R6B
D948 DTZ5R6B
D963 DTZ5R6B
R983 100
R908 1K
C901 22P
D902 DTZ5R1B
IC902 X24LC08BTISN or TVR8AJ023
EEPROM
A0
A1
A2
Vss
SDA
SCL
NC
Vcc
R977 22K
R978 3.9K
R979 3.9K
R923 10K
R901 10K
R931 10K
R930 10K
C912 0.033
D912 MTZJ5R6
R981 33K
D946 MA142WK
D951 DTZ5R6B
D950 DTZ5R6B
5.6Vp-p
5.8Vp-p
0.0V
2.2V
4.9V
PSW_HEAT
POWER_OFF
SUSPEND
STAND_BY
(H_MOIRE_ON)
(V_MOIRE_ON)
RESET
5V
VS_OFF
HS_OFF
HD
ENT_OFF
H_B_OFF
C_SEL1
C_SEL2
FH_SW
A
B
G
1
2
R944 10K
R938 470
C904 0.01
R941 22K
R940 22K
R943 10K
R937 470
C903 0.01
R984 100
R985 100
D907 DTZ5R6B
D905 DTZ5R6B
R538 143K ±1%
R537 560 ±1%
C753 0.01
C590 1000P
C521 470 6.3V
L521 560
C526 3.3 50V
C527 3.3 50V
IC751 (MB88346BPF)
IC502 MB88346BPF
VCC
VDD
AO11
AO12
DO
LD
CLK
DI
AO1
AO2
GND
VSS
AO10
AO9
AO8
AO7
AO6
AO5
AO4
AO3
(Z_AXIS)
(V_MOIRE_G)
(H_MOIRE_G)
(V_LIN_C)
(V_PCC_BALANCE)
H_POSI
H_DRIVE_B
V_LIN_S
TRAPEZOID
V_PCC_G
V_PCC_C
PARALLELOGRAM
V_POSI
H_DUTY
V_SIZE
H_OSC
TNP890535 ⚠

*	
at AC 100 V	94 V
at AC 120 V	106 V
at AC 220 V	200 V
at AC 240 V	220 V

TNP890535 ⚠

PRIMARY | SECONDARY

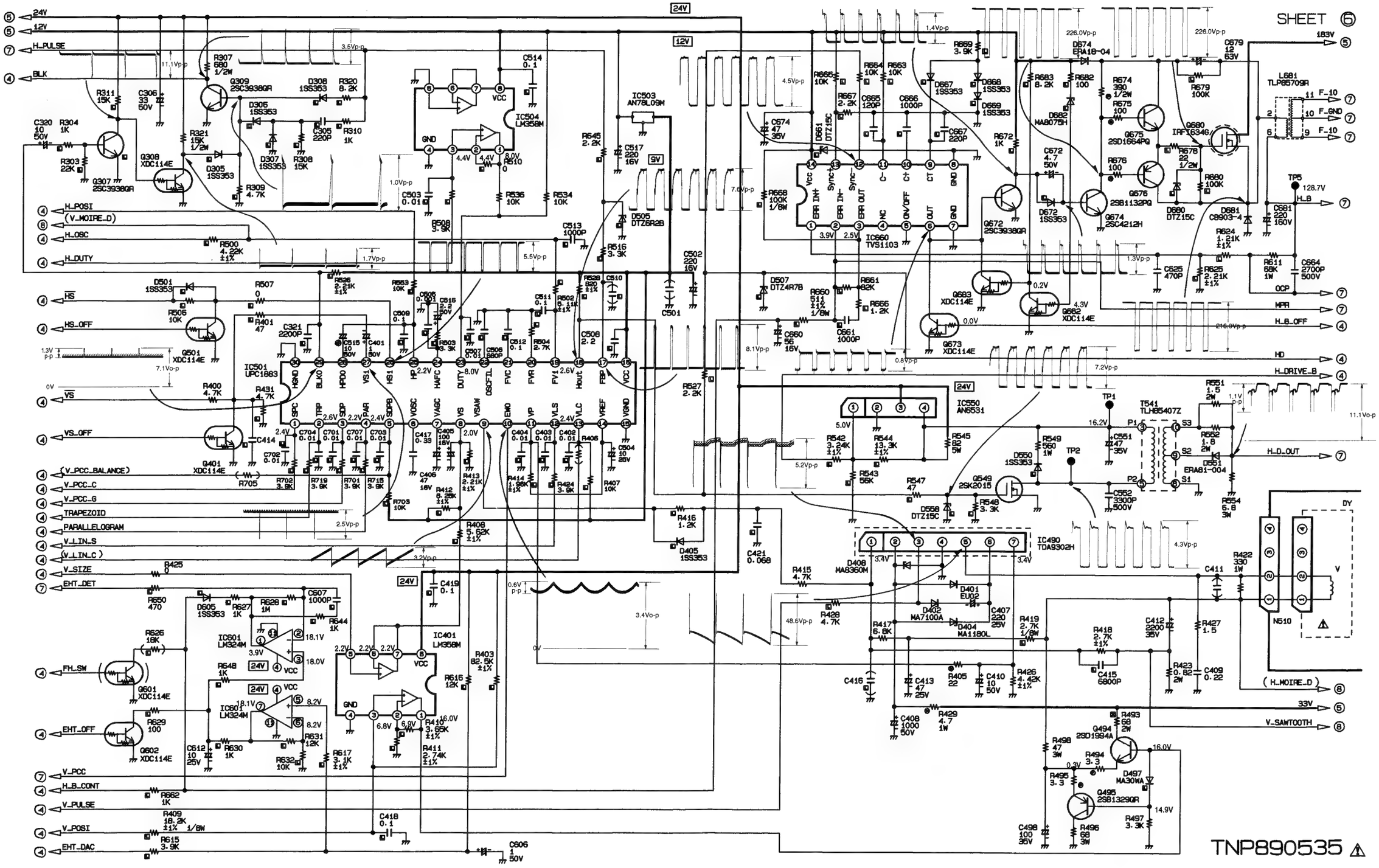
SHEET 6
TNP890535
24V
12V
9V
H_PULSE
BLK
H_POSI
(V_MOIRE_D)
H_OSC
H_DUTY
HS
HS_OFF
VS
VS_OFF
(V_PCC_BALANCE)
V_PCC_C
V_PCC_G
TRAPEZOID
PARALLELOGRAM
V_LIN_S
(V_LIN_C)
V_SIZE
EHT_DET
FH_SW
EHT_OFF
V_PCC
H_B_CONT
V_PULSE
V_POSI
EHT_DAC
183V
F_10
F_GND
H_B
OCP
MPR
H_B_OFF
HD
H_DRIVE_B
H_D_OUT
(H_MOIRE_D)
33V
V_SAWTOOTH
IC501 UPC1883
IC504 LM358M
IC503 AN78L09M
IC660 TVS1103
IC550 AN6531
IC490 TDA9302H
IC601 LM324M
IC401 LM358M
T541 TLH85407Z
L681 TLP85709R
N510
DY
V

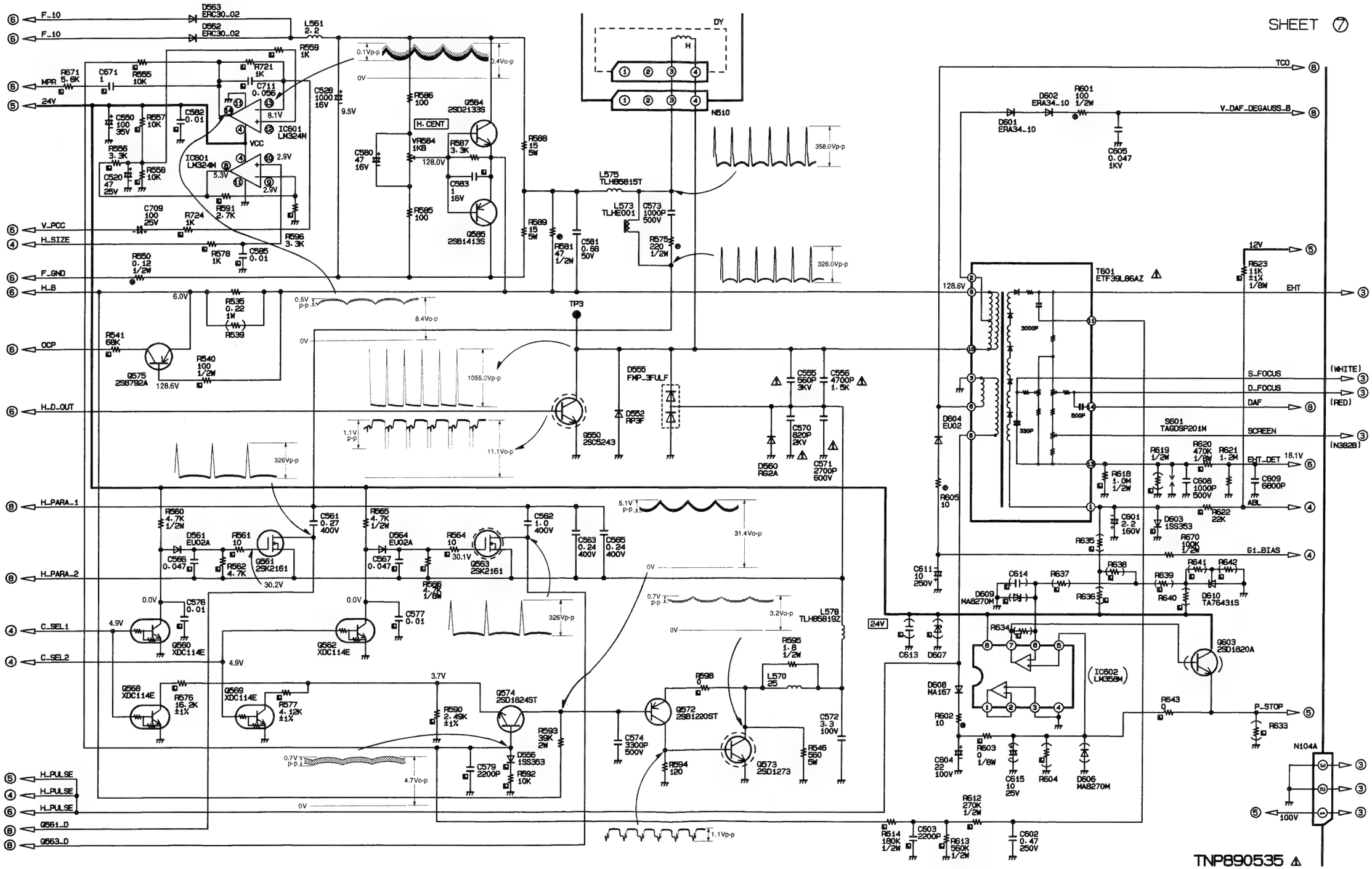
SHEET 7
F_10
MPR
24V
V_PCC
H_SIZE
F_GND
H_B
OCP
H_D_OUT
H_PARA_1
H_PARA_2
C_SEL1
C_SEL2
H_PULSE
Q561_D
Q563_D
TCO
V_DAF_DEGAUSS_B
12V
EHT
S_FOCUS
D_FOCUS
DAF
SCREEN
EHT_DET
ABL
G1_BIAS
P_STOP
(WHITE)
(RED)
(N382B)
N104A
100V
DY
N510
TP3
IC601 LM324M
IC602 LM358M
T601 ETF39L86AZ
S601 TAGDSP201M
Q550 2SC5243
Q561 2SK2161
Q563 2SK2161
Q560 XDC114E
Q562 XDC114E
Q568 XDC114E
Q569 XDC114E
Q574 2SD1824ST
Q572 2SB1220ST
Q573 2SD1273
Q575 2SB792A
Q584 2SD2133S
Q585 2SB1413S
Q603 2SD1820A
D555 FMP_3FULF
D552 RP3F
D560 RG2A
D604 EU02
D601 ERA34_10
D602 ERA34_10
D603 1SS353
D610 TA76431S
D609 MA8270M
D608 MA167
D606 MA8270M
D556 1SS353
D561 EU02A
D564 EU02A
L575 TLH85815T
L573 TLHE001
L578 TLH85819Z
L570 25
VR584 1KB
H. CENT
TNP890535

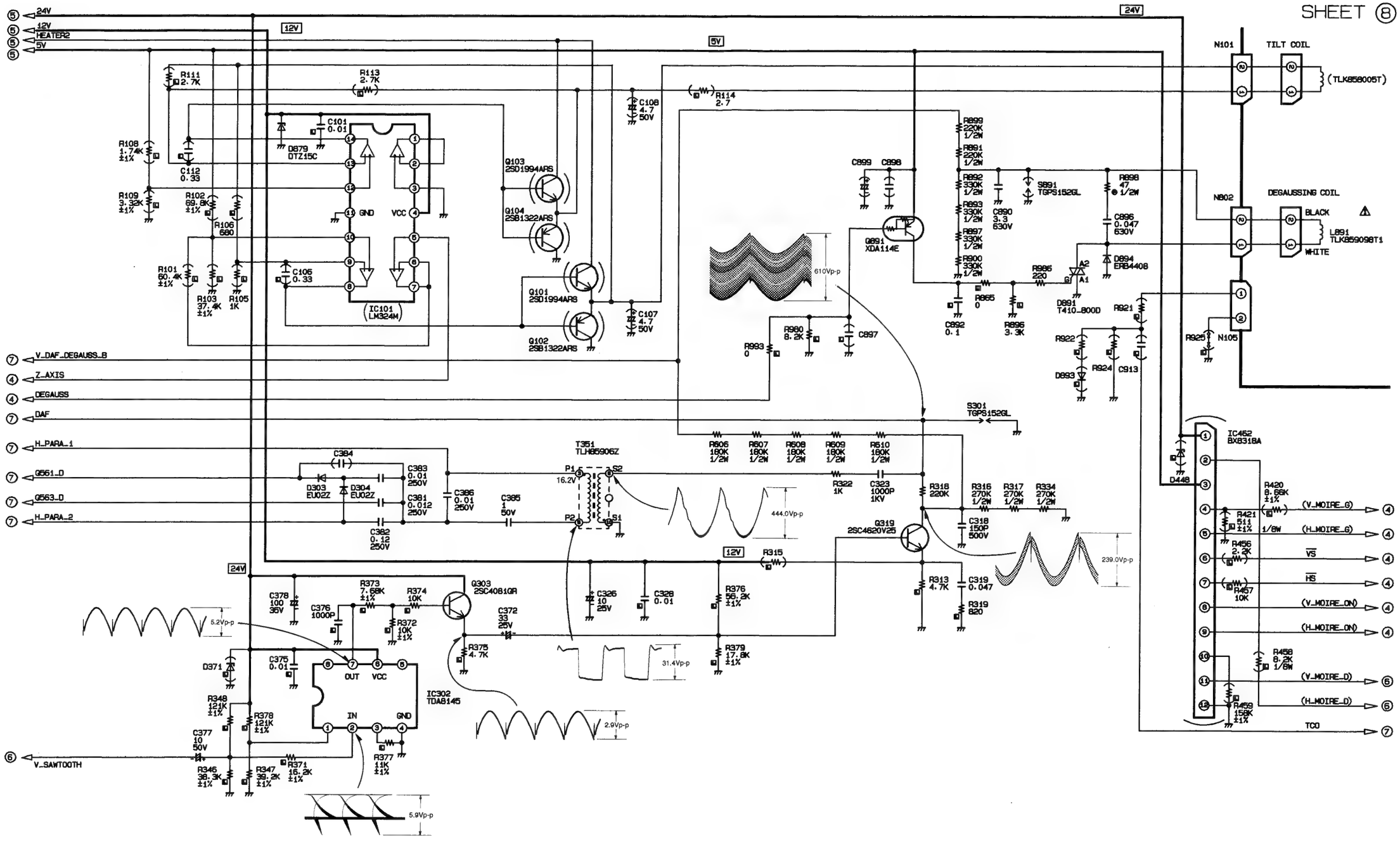
⑤ 24V
⑤ 12V
⑤ HEATER2
⑤ 5V
12V
5V
24V
R111 2.7K
R113 2.7K
R114 2.7
C108 4.7 50V
C107 4.7 50V
R108 1.74K ±1%
C112 0.33
R109 3.32K ±1%
R102 69.8K ±1%
R106 680
R101 60.4K ±1%
R103 37.4K ±1%
R105 1K
C101 0.01
D879 DTZ15C
C106 0.33
IC101 LM324M
GND
VCC
Q103 2SD1994ARS
Q104 2SB1322ARS
Q101 2SD1994ARS
Q102 2SB1322ARS
610Vp-p
C899
C898
Q891 XDA114E
R899 220K 1/2W
R891 220K 1/2W
R892 330K 1/2W
R893 330K 1/2W
R897 330K 1/2W
R900 330K 1/2W
C890 3.3 630V
S891 TGPS152GL
R898 47 1/2W
C896 0.047 630V
D894 ERB4408
R986 220
R865 0
C892 0.1
R896 3.3K
D891 T410-800D
R921
R922
R924
C913
D893
R993 0
R960 8.2K
C897
N101
TILT COIL
(TLK858005T)
N802
DEGAUSSING COIL
BLACK
L891 TLK859098T1
WHITE
R925
N105
⑦ V_DAF_DEGAUSS_B
④ Z_AXIS
④ DEGAUSS
⑦ DAF
⑦ H_PARA_1
⑦ Q561_D
⑦ Q563_D
⑦ H_PARA_2
C384
C383 0.01 250V
D303 EU02Z
D304 EU02Z
C381 0.012 250V
C382 0.12 250V
C386 0.01 250V
C385 1 50V
T351 TLH85906Z
P1
P2
S2
S1
16.2V
444.0Vp-p
S301 TGPS152GL
R606 180K 1/2W
R607 180K 1/2W
R608 180K 1/2W
R609 180K 1/2W
R610 180K 1/2W
R322 1K
C323 1000P 1KV
R318 220K
R316 270K 1/2W
R317 270K 1/2W
R334 270K 1/2W
C318 150P 500V
Q319 2SC4620V25
239.0Vp-p
R313 4.7K
C319 0.047
R319 820
R315
C326 10 25V
C328 0.01
R376 56.2K ±1%
R379 17.8K ±1%
31.4Vp-p
Q303 2SC4081QR
C372 33 25V
R375 4.7K
IC302 TDA8145
OUT
VCC
IN
GND
2.9Vp-p
5.2Vp-p
C378 100 35V
C376 1000P
R373 7.68K ±1%
R374 10K
R372 10K ±1%
C375 0.01
D371
R348 121K ±1%
R378 121K ±1%
C377 10 50V
R345 38.3K ±1%
R347 39.2K ±1%
R371 16.2K ±1%
5.9Vp-p
⑥ V_SAWTOOTH
D448
IC452 BX8318A
R420 8.66K ±1%
R421 511 ±1% 1/8W
R456 2.2K
R457 10K
R458 8.2K 1/8W
R459 158K ±1%
(V_MOIRE_G)
(H_MOIRE_G)
VS
HS
(V_MOIRE_ON)
(H_MOIRE_ON)
(V_MOIRE_D)
(H_MOIRE_D)
TCO

TNP890535 ⚠

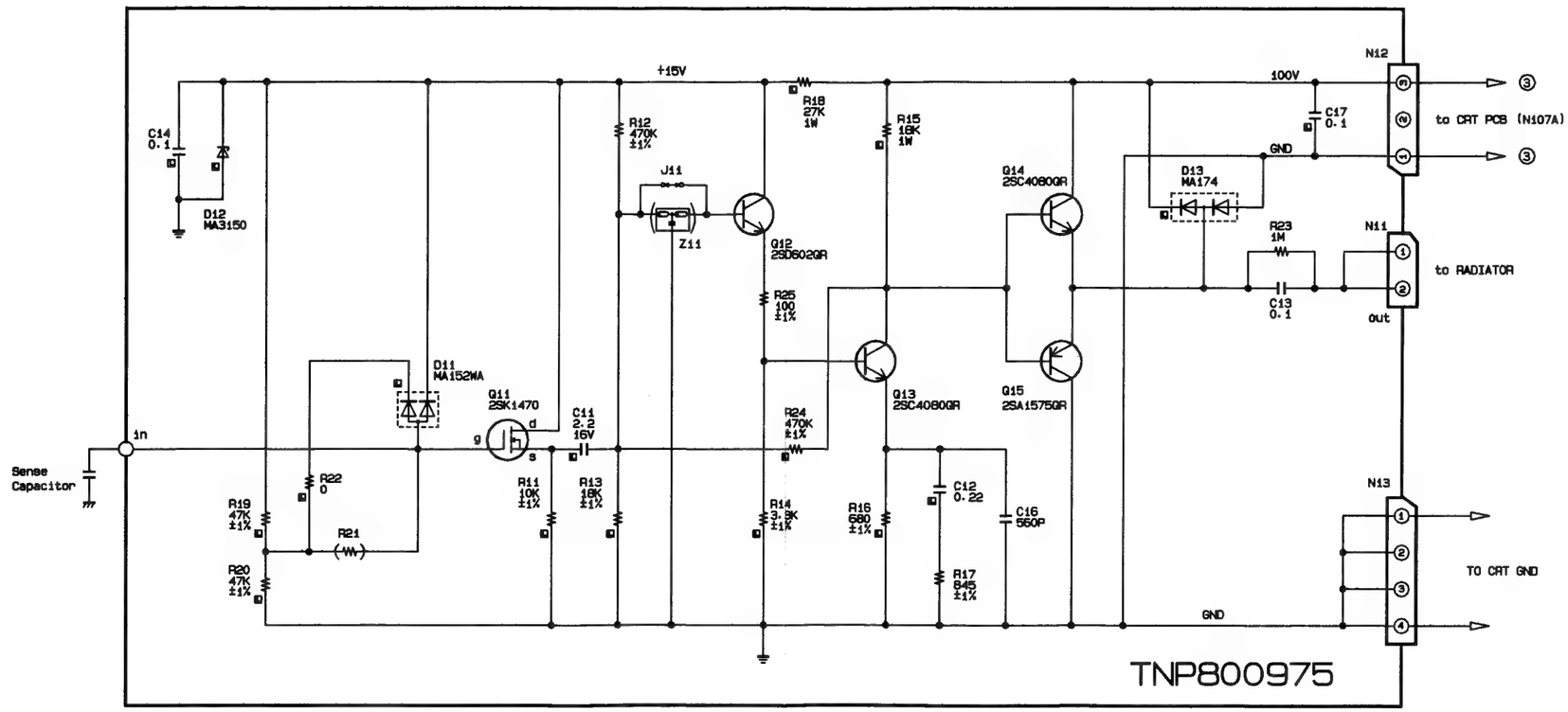
+15V
100V
GND
C14
0.1
D12
MA3150
R12
470K
±1%
J11
Z11
R18
27K
1W
R15
18K
1W
Q12
2SD602QR
R25
100
±1%
Q14
2SC4080QR
D13
MA174
C17
0.1
N12
to CRT PCB (N107A)
R23
1M
C13
0.1
N11
to RADIATOR
out
D11
MA152WA
Q11
2SK1470
C11
2.2
16V
Q13
2SC4080QR
Q15
2SA1575QR
R24
470K
±1%
in
Sense
Capacitor
R22
0
R19
47K
±1%
R21
R20
47K
±1%
R11
10K
±1%
R13
18K
±1%
R14
3.9K
±1%
R16
680
±1%
C12
0.22
C16
560P
R17
845
±1%
N13
TO CRT GND
GND
TNP800975

TROUBLE SHOOTING HINTS

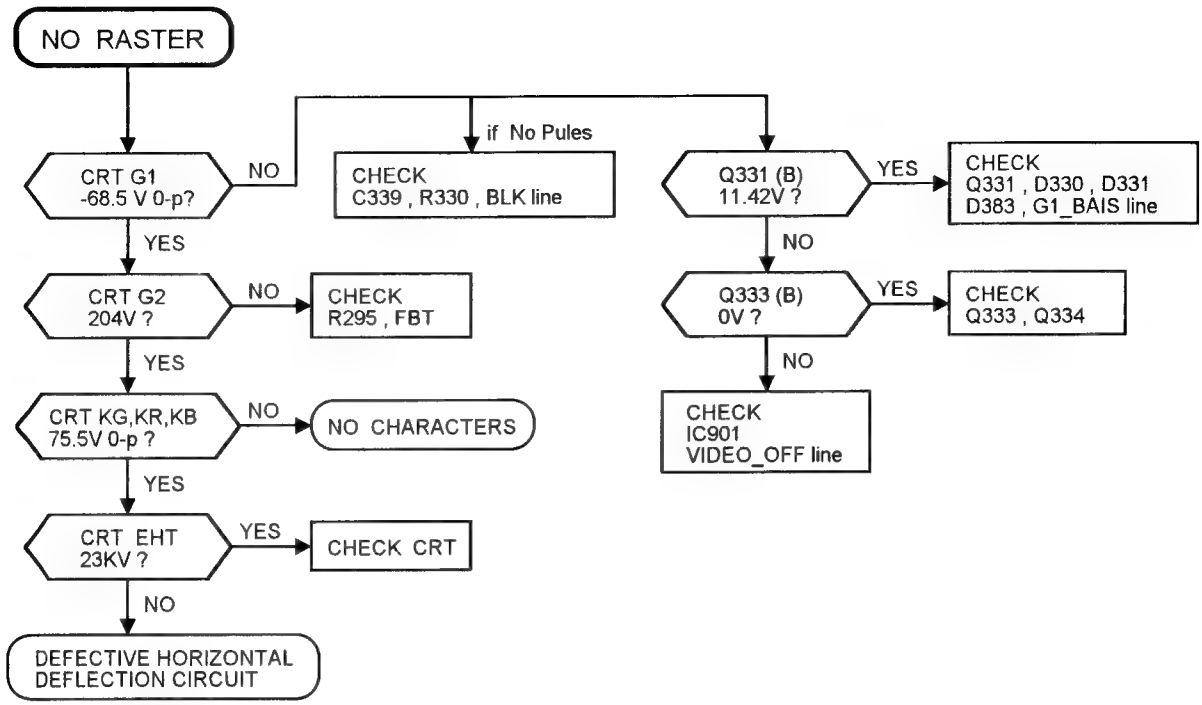

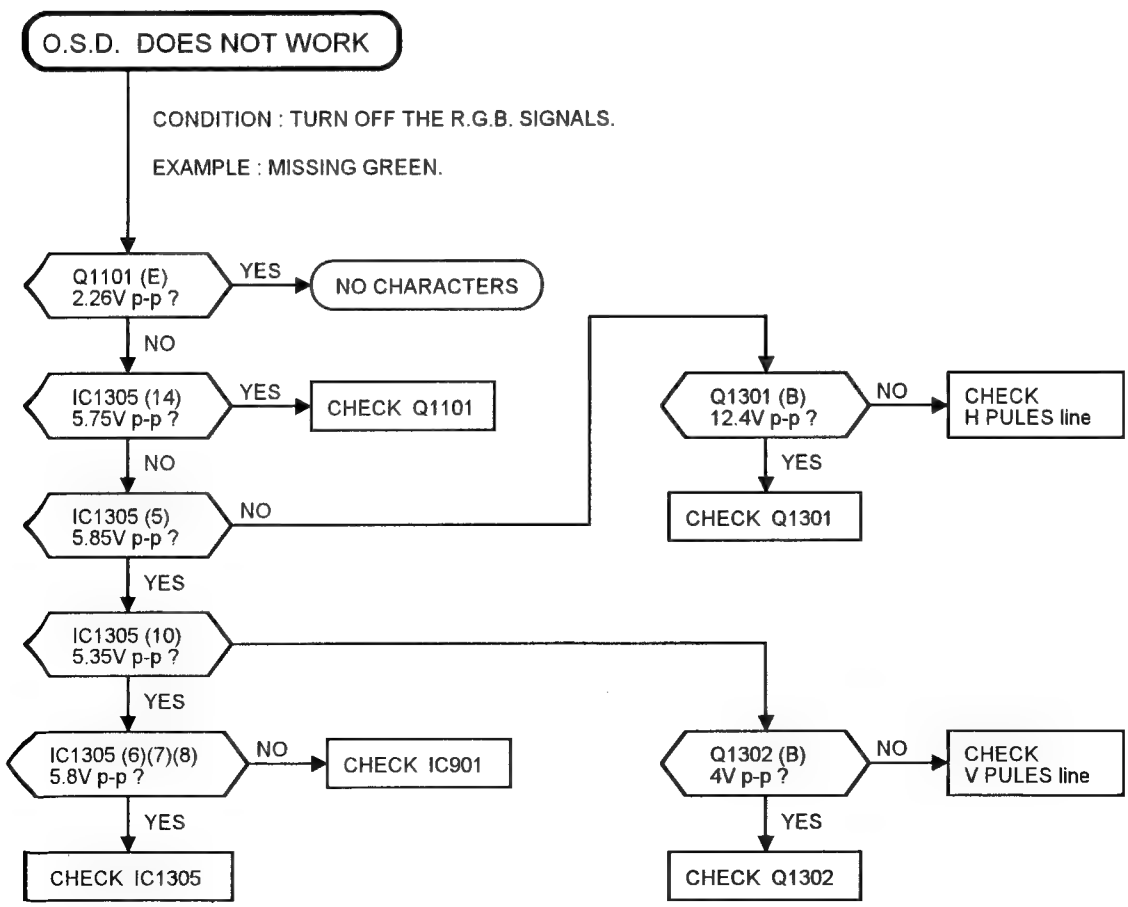

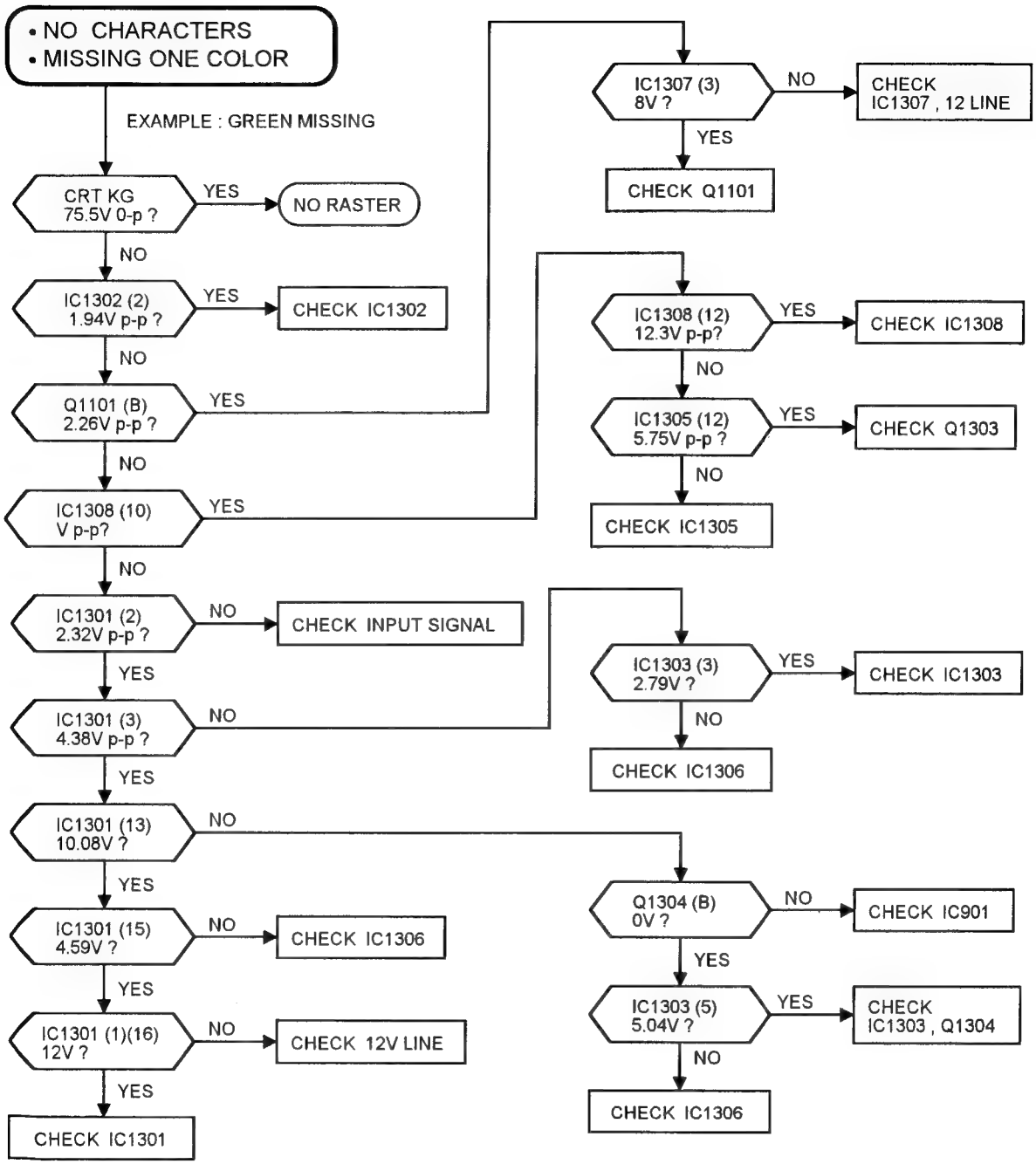
• NO CHARACTERS
• MISSING ONE COLOR
EXAMPLE : GREEN MISSING
CRT KG 75.5V 0-p ?
YES
NO RASTER
NO
IC1302 (2) 1.94V p-p ?
YES
CHECK IC1302
NO
Q1101 (B) 2.26V p-p ?
YES
NO
IC1308 (10) V p-p?
YES
NO
IC1301 (2) 2.32V p-p ?
NO
CHECK INPUT SIGNAL
YES
IC1301 (3) 4.38V p-p ?
NO
YES
IC1301 (13) 10.08V ?
NO
YES
IC1301 (15) 4.59V ?
NO
CHECK IC1306
YES
IC1301 (1)(16) 12V ?
NO
CHECK 12V LINE
YES
CHECK IC1301
IC1307 (3) 8V ?
NO
CHECK IC1307 , 12 LINE
YES
CHECK Q1101
IC1308 (12) 12.3V p-p?
YES
CHECK IC1308
NO
IC1305 (12) 5.75V p-p ?
YES
CHECK Q1303
NO
CHECK IC1305
IC1303 (3) 2.79V ?
YES
CHECK IC1303
NO
CHECK IC1306
Q1304 (B) 0V ?
NO
CHECK IC901
YES
IC1303 (5) 5.04V ?
YES
CHECK IC1303 , Q1304
NO
CHECK IC1306

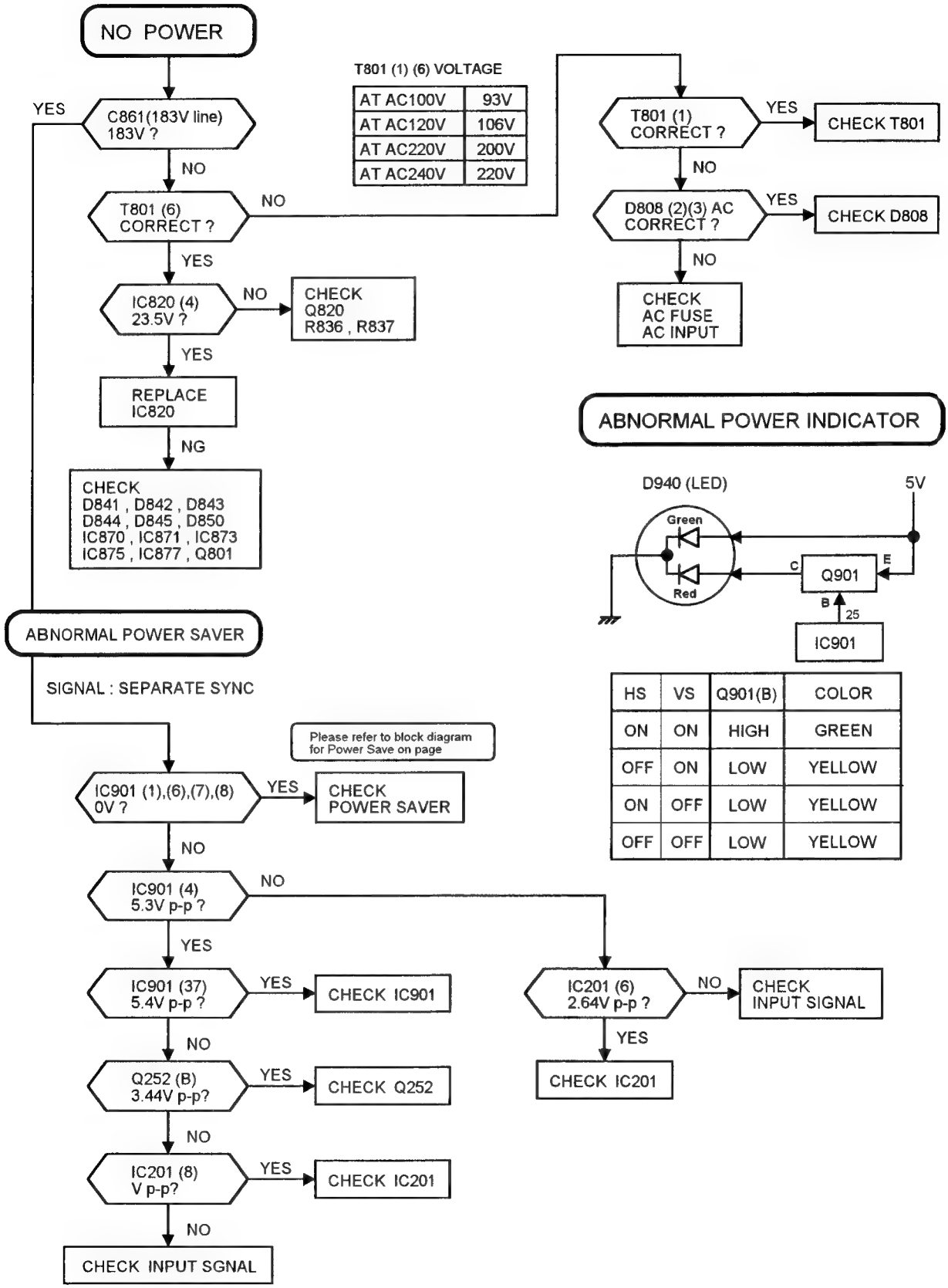
NO POWER
YES
C861(183V line)
183V ?
NO
T801 (6)
CORRECT ?
NO
YES
IC820 (4)
23.5V ?
NO
CHECK
Q820
R836 , R837
YES
REPLACE
IC820
NG
CHECK
D841 , D842 , D843
D844 , D845 , D850
IC870 , IC871 , IC873
IC875 , IC877 , Q801
T801 (1) (6) VOLTAGE
AT AC100V 93V
AT AC120V 106V
AT AC220V 200V
AT AC240V 220V
T801 (1)
CORRECT ?
YES
CHECK T801
NO
D808 (2)(3) AC
CORRECT ?
YES
CHECK D808
NO
CHECK
AC FUSE
AC INPUT
ABNORMAL POWER INDICATOR
D940 (LED)
5V
Green
Red
C
Q901
E
B
25
IC901
HS VS Q901(B) COLOR
ON ON HIGH GREEN
OFF ON LOW YELLOW
ON OFF LOW YELLOW
OFF OFF LOW YELLOW
ABNORMAL POWER SAVER
SIGNAL : SEPARATE SYNC
Please refer to block diagram
for Power Save on page
IC901 (1),(6),(7),(8)
0V ?
YES
CHECK
POWER SAVER
NO
IC901 (4)
5.3V p-p ?
NO
YES
IC901 (37)
5.4V p-p ?
YES
CHECK IC901
NO
Q252 (B)
3.44V p-p?
YES
CHECK Q252
NO
IC201 (8)
V p-p?
YES
CHECK IC201
NO
CHECK INPUT SGNAL
IC201 (6)
2.64V p-p ?
NO
CHECK
INPUT SIGNAL
YES
CHECK IC201

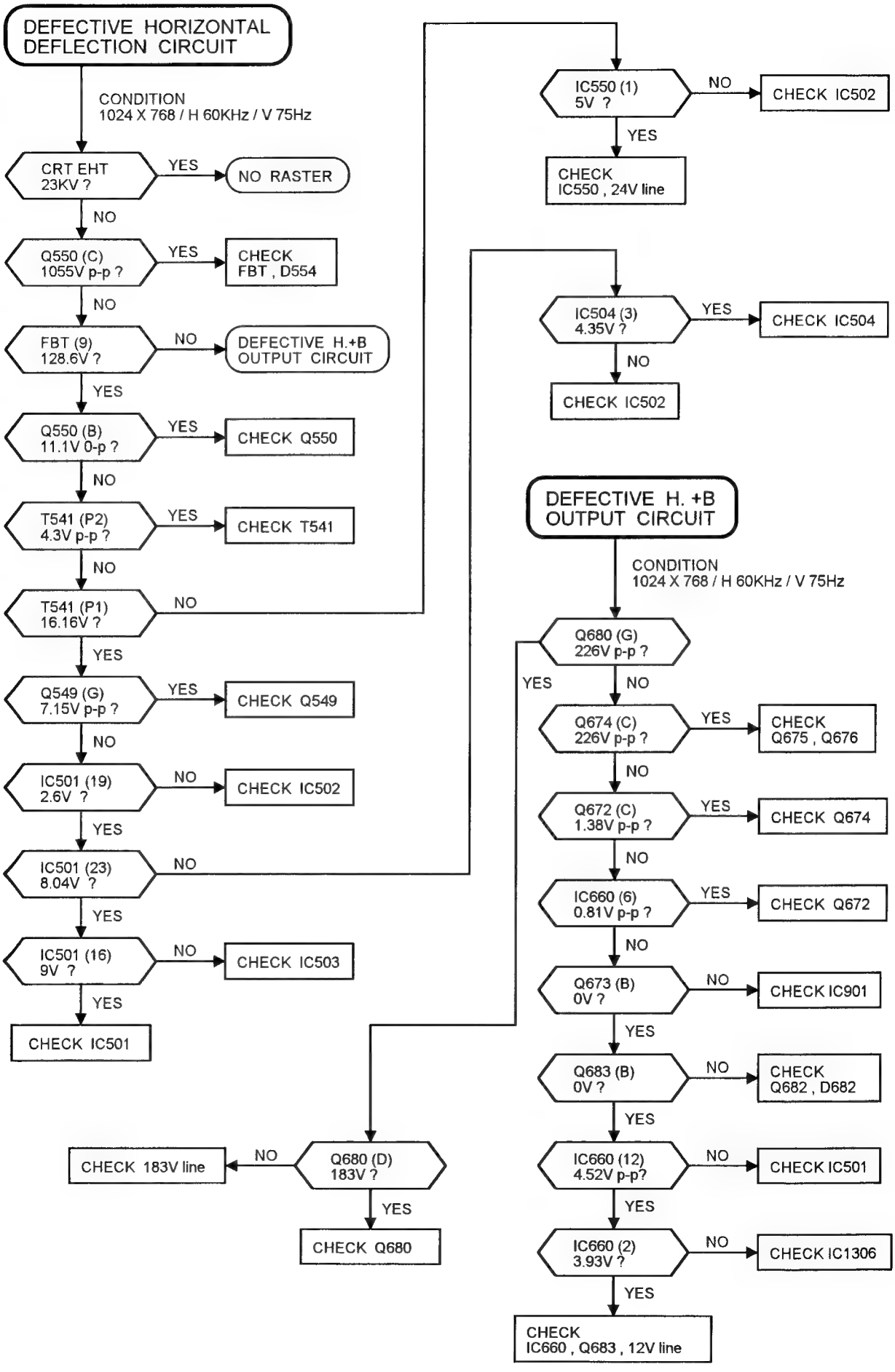
DEFECTIVE HORIZONTAL DEFLECTION CIRCUIT
CONDITION
1024 X 768 / H 60KHz / V 75Hz
CRT EHT 23KV ?
YES
NO RASTER
NO
Q550 (C) 1055V p-p ?
YES
CHECK FBT , D554
NO
FBT (9) 128.6V ?
NO
DEFECTIVE H.+B OUTPUT CIRCUIT
YES
Q550 (B) 11.1V 0-p ?
YES
CHECK Q550
NO
T541 (P2) 4.3V p-p ?
YES
CHECK T541
NO
T541 (P1) 16.16V ?
NO
YES
Q549 (G) 7.15V p-p ?
YES
CHECK Q549
NO
IC501 (19) 2.6V ?
NO
CHECK IC502
YES
IC501 (23) 8.04V ?
NO
YES
IC501 (16) 9V ?
NO
CHECK IC503
YES
CHECK IC501
IC550 (1) 5V ?
NO
CHECK IC502
YES
CHECK IC550 , 24V line
IC504 (3) 4.35V ?
YES
CHECK IC504
NO
CHECK IC502
DEFECTIVE H. +B OUTPUT CIRCUIT
CONDITION
1024 X 768 / H 60KHz / V 75Hz
Q680 (G) 226V p-p ?
YES
NO
Q674 (C) 226V p-p ?
YES
CHECK Q675 , Q676
NO
Q672 (C) 1.38V p-p ?
YES
CHECK Q674
NO
IC660 (6) 0.81V p-p ?
YES
CHECK Q672
NO
Q673 (B) 0V ?
NO
CHECK IC901
YES
Q683 (B) 0V ?
NO
CHECK Q682 , D682
YES
IC660 (12) 4.52V p-p?
NO
CHECK IC501
YES
IC660 (2) 3.93V ?
NO
CHECK IC1306
YES
CHECK IC660 , Q683 , 12V line
Q680 (D) 183V ?
NO
CHECK 183V line
YES
CHECK Q680

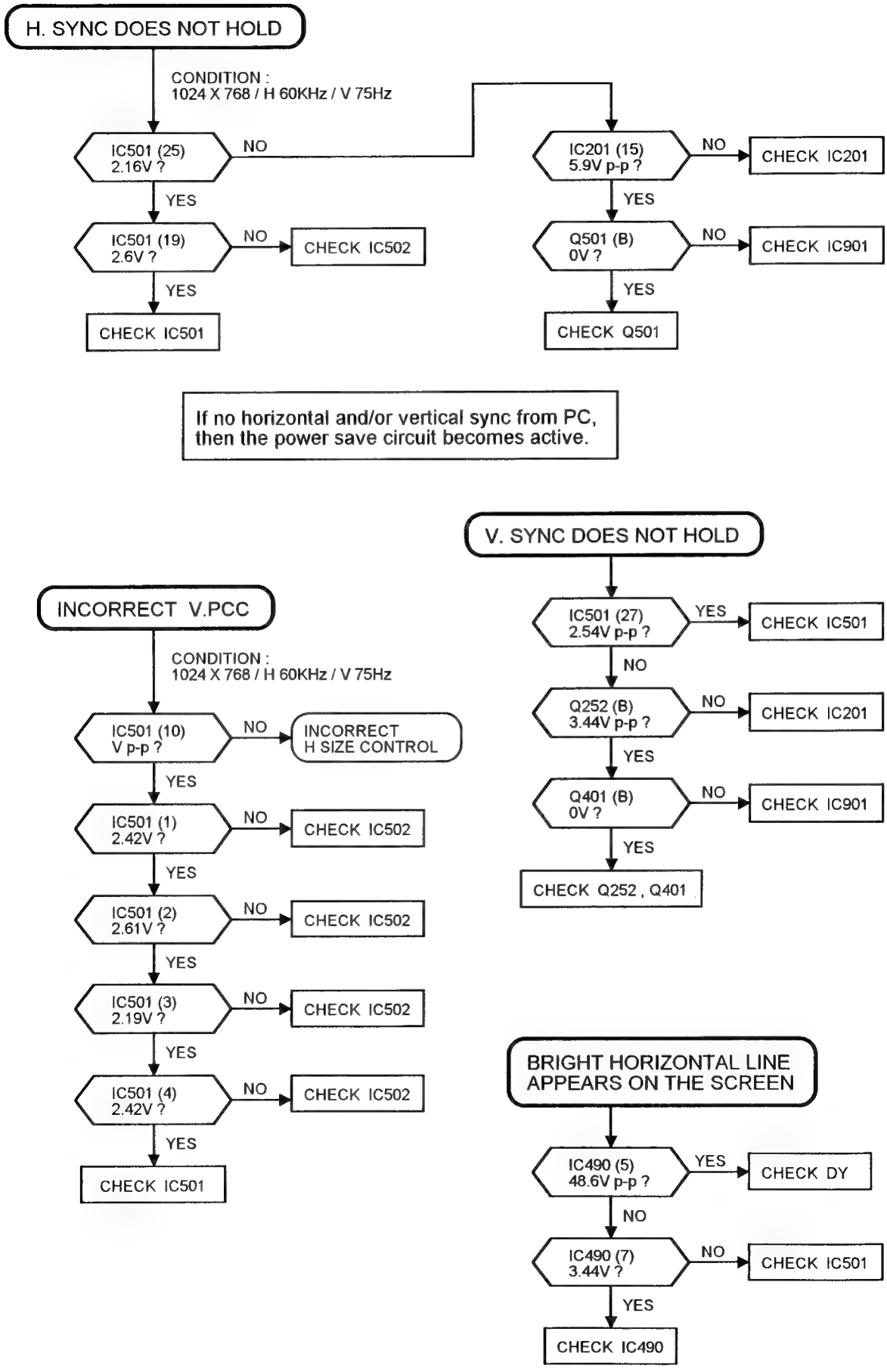
H. SYNC DOES NOT HOLD
CONDITION :
1024 X 768 / H 60KHz / V 75Hz
IC501 (25)
2.16V ?
NO
YES
IC501 (19)
2.6V ?
NO
CHECK IC502
YES
CHECK IC501
IC201 (15)
5.9V p-p ?
NO
CHECK IC201
YES
Q501 (B)
0V ?
NO
CHECK IC901
YES
CHECK Q501
If no horizontal and/or vertical sync from PC,
then the power save circuit becomes active.
V. SYNC DOES NOT HOLD
IC501 (27)
2.54V p-p ?
YES
CHECK IC501
NO
Q252 (B)
3.44V p-p ?
NO
CHECK IC201
YES
Q401 (B)
0V ?
NO
CHECK IC901
YES
CHECK Q252 , Q401
INCORRECT V.PCC
CONDITION :
1024 X 768 / H 60KHz / V 75Hz
IC501 (10)
V p-p ?
NO
INCORRECT
H SIZE CONTROL
YES
IC501 (1)
2.42V ?
NO
CHECK IC502
YES
IC501 (2)
2.61V ?
NO
CHECK IC502
YES
IC501 (3)
2.19V ?
NO
CHECK IC502
YES
IC501 (4)
2.42V ?
NO
CHECK IC502
YES
CHECK IC501
BRIGHT HORIZONTAL LINE
APPEARS ON THE SCREEN
IC490 (5)
48.6V p-p ?
YES
CHECK DY
NO
IC490 (7)
3.44V ?
NO
CHECK IC501
YES
CHECK IC490

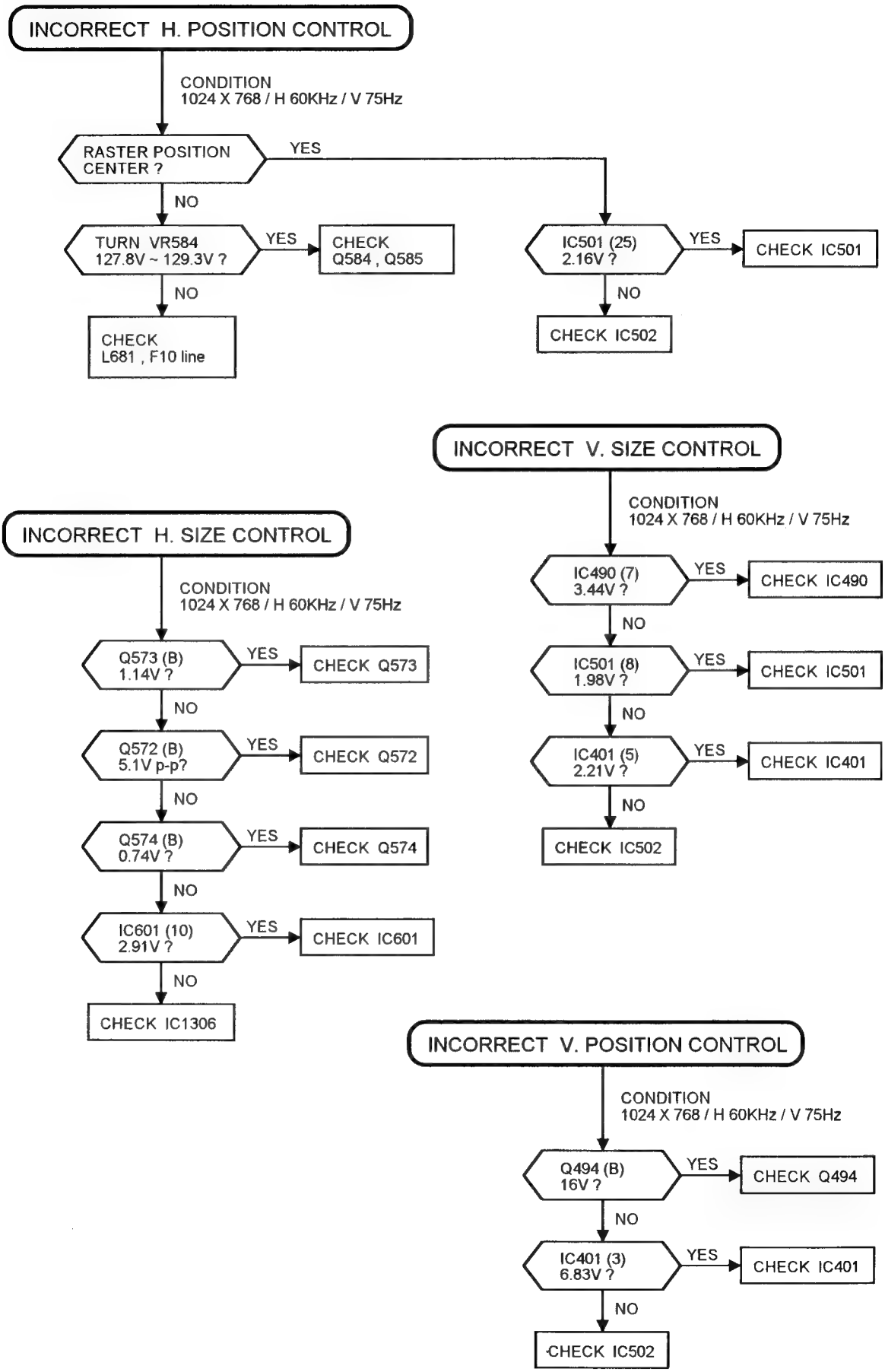
INCORRECT H. POSITION CONTROL
CONDITION
1024 X 768 / H 60KHz / V 75Hz
RASTER POSITION CENTER ?
YES
NO
TURN VR584 127.8V ~ 129.3V ?
YES
CHECK Q584 , Q585
NO
CHECK L681 , F10 line
IC501 (25) 2.16V ?
YES
CHECK IC501
NO
CHECK IC502
INCORRECT V. SIZE CONTROL
CONDITION
1024 X 768 / H 60KHz / V 75Hz
IC490 (7) 3.44V ?
YES
CHECK IC490
NO
IC501 (8) 1.98V ?
YES
CHECK IC501
NO
IC401 (5) 2.21V ?
YES
CHECK IC401
NO
CHECK IC502
INCORRECT H. SIZE CONTROL
CONDITION
1024 X 768 / H 60KHz / V 75Hz
Q573 (B) 1.14V ?
YES
CHECK Q573
NO
Q572 (B) 5.1V p-p?
YES
CHECK Q572
NO
Q574 (B) 0.74V ?
YES
CHECK Q574
NO
IC601 (10) 2.91V ?
YES
CHECK IC601
NO
CHECK IC1306
INCORRECT V. POSITION CONTROL
CONDITION
1024 X 768 / H 60KHz / V 75Hz
Q494 (B) 16V ?
YES
CHECK Q494
NO
IC401 (3) 6.83V ?
YES
CHECK IC401
NO
CHECK IC502

REPLACEMENT PARTS LIST

Important Safety Notice

Components identified by the International symbol ⚠ have special characteristics important for safety. When replacing any of these components use only manufacture's specified parts.

RESISTOR

PART NAME & DESCRIPTION			
TYPE		ALLOWANCE	
C	Carbon	F	± 1%
F	Fuse	J	± 5%
M	Metal Oxide	K	± 10%
S	Solid	M	± 20%
W	Wire Wound	G	± 2%

Example: Part No. ERD25TJ104 (C) Description 100K (J) 1/4W

CAPACITOR

PART NAME & DESCRIPTION			
TYPE		ALLOWANCE	
C	Ceramic	C	± 0.25pF
E	Electrolytic	D	± 0.5pF
P	Polyester	F	± 1pF
S	Styrol	J	± 5%
T	Tantalum	K	± 10%
PP	Polypropylene	L	± 15%
		M	± 20%
		P	+100% – 0%
		Z	+80% – 20%

Example: Part No. ECKF1H103ZF (C) Description 0.01μF (Z) 50V

	Ref.No.	Part No.	Description
		CABINET & MAIN PARTS	
⚠	1	TKY859511	BOTTOM CABINET
⚠	2	TKE8711B05	ESCUTCHEON<NM>
⚠	2	TTE8711B05-3	ESCUTCHEON<-E,-G,-SW,-U>
⚠	3	TKU894207-1H	REAR COVER W/MODEL PLATE <NM>
⚠	3	TKU894207-3H	REAR COVER W/MODEL PLATE <-E,-G>
⚠	3	TKU894207-5H	REAR COVER W/MODEL PLATE <-SW>
⚠	3	TKU894207-6H	REAR COVER W/MODEL PLATE <-U>
	4	TKX871701	MAIN PCB HOLDER
	5	TKK859310	LED GUIDE
		TKK859745	CONNECTOR COVER
		TKK859973	BLIND COVER
	6	TKK859979	PEDESTAL
	7	TKK859980	CENTER POST
	8	TUX86195	BOTTOM PLATE BRACKET
	9	TUX87721	BOTTOM PLATE
		TSAA3001	RADIATOR
	10	TUC86948	EARTH METAL(R-UPPER)
	11	TUC86949	EARTH METAL(L-UPPER)
	12	TUC86950-1	EARTH METAL(R-UNDER)
	13	TUC86951	EARTH METAL(L-UNDER)
		TUC87308	EARTH METAL(D-SUB)
	15	TUC87566-2	SHIELD CASE
	16	TUC87567-1	SHIELD CASE(REAR)
	17	TUC87579	SHIELD CASE(CRT PCB)
	18	TUC87580	SHIELD PLATE(CRT PCB)
⚠		TBMC042	MODEL PLATE<-E,-G>
⚠	19	TBMC043	MODEL PLATE<-U>
⚠	19	TBMC044	MODEL PLATE<-SW>
⚠	19	TBM850546	MODEL PLATE<NM>
	20	TBX8751301	KNOB(POWER SWITCH)
	21	TBX8752201	KNOB(CONTROL)
	22	TES8365	FBT SPRING
	23	TES8366	FBT SPRING(HOOK)
		TES9148-3	SPRING(CRT EARTH)
	24	TES9531	CRT PCB HOLDER
	25	TMM15404-1	SPACER RING
		TMM15414	CLAMPER(SMALL)
		TMM7464	LEAD CLAMPER(SMALL)
		TMM7468	CLAMPER
	26	TMM85576-1	CRT RUBBER
		TMM85586	RUBBER(WEDGE)
		TMKG001	RUBBER
		TMKG003	RUBBER
	27	TMK84990	SET LEG
		TMK85572	FERRITE STICK
		TMK85584	SWITCH BARRIER
		THEC0019	SCREW(FOR CRT PCB HOLDER)
		THT1027	SCREW(FOR CRT)
		THT1069	SCREW(FOR SHIELD CASE)
		XTB4+12J	SCREW
		XTN5+16A	SCREW
		XTN5+25AFC	SCREW
		XYA4+EF8	SCREW
		XYE3+EJ10	SCREW
⚠	30	M41KXH140X-W	PICTURE TUBE
	31	TNP800970-21	PC BOARD W/COMPONENT(CRT)
		TNP800975-23	PC BOARD W/COMPONENT(TCO)
⚠	32	TNP890535-21	PC BOARD W/COMPONENT(M)
⚠	33	MEY41GHD	DEFLECTION YOKE
	34	ETC33D53NC	CONVERGENCE COIL
⚠	35	TLK859098T1	DEGAUSS COIL
		TSXX004	1P TERMINAL CORD
		TSXX005	2P CONNECTOR CORD
		TSXX006	2P/3P CONNECTOR CORD
		TSXX008	2P CONNECTOR CORD
		TSX4515	SIGNAL CORD<-E,-G,-SW>
		TSX4515-1	SIGNAL CORD<-U,NM>

	Ref.No.	Part No.	Description
⚠		TSX8484	POWER CORD<-E,-G>
⚠		TSX8492	POWER CORD<-SW>
⚠		TSX8493	POWER CORD<-U>
⚠		TSX9416	POWER CORD<NM>
	36	TSX9809	FLAT CORD(10P)
	37	TSX9810	FLAT CORD(22P)
		TJT8999	HEXAGON POST
		TXA3A11733VM	CRT EARTH LEAD <-E,-G,-SW,-U>
		TXA3A11733NM	CRT EARTH LEAD<NM>
		TSN85511	MAGNET
		T4F31519Q	POLYESTER TAPE(20M)
		T4F72425Q	COTTON TAPE(55M)
		T4F90240	MAIRA TAPE
		TPCA02301	OUTER CARTON <-E,-G,-SW,-U>
		TPC8552701	OUTER CARTON<NM>
		TXAPD2D1751	FILLER
		TPE814109	SET COVER<NM>
		TPE814109-2	SET COVER<-E,-G,-SW,-U>
		TQE8513-1	FUN BAG COVER<NM>
		TQE8513-2	FUN BAG COVER <-E,-G,-SW,-U>
⚠		TQBE0006	INSTRUCTION BOOK <-E,-G,-SW,-U>
⚠		TQB820269	INSTRUCTION BOOK<NM>
		TQDE18002	WARRANTY CARD<-E>
		TQD8518073-1	WARRANTY CARD<-U>
		TQD1712010	PASS CARD <-E,-G,-SW,-U>
		TQF80720	HWC LABEL<NM>
		TQF82880	HIGH VOLTAGE LABEL<NM>
		TQF83825-6	SERIAL NO. LABEL
		TQF85363-2	CARTON LABEL<-G>
		TQF85363-3	CARTON LABEL<-SW>
		TQF85363-4	CARTON LABEL<-U>
		TQF85363-8	CARTON LABEL<-E>
⚠		TQF86550	EARTH CAUTION LABEL<-SW>
		TQF86574	US PATENTS LABEL<NM>
		TQF86583-1	POWER CORD LABEL<-U>
⚠		TQF86608	EARTH CAUTION LABEL <-E,-G,NM>
		I.C	
	IC201	M52346SP	IC
	IC280	24LC21TISN	IC
	IC302	TDA8145	IC
	IC351	LM358MX	IC
	IC401	LM358MX	IC
	IC490	TDA9302H	IC
	IC501	UPC1883	IC
	IC502	MB88346BPFTF	IC
	IC503	AN78L09M-E1	IC
	IC504	LM358MX	IC
	IC550	AN6531	IC
	IC601	LM324MX	IC
	IC660	TVS1103	IC
	IC820	STR-S6533	HYBRID IC
	IC870	M5F7824L	IC
	IC871	SI-3120FALF	IC
	IC873	SI-3240CA	HYBRID IC
	IC876	L78LR05C-MA	IC

	Ref.No.	Part No.	Description
	IC877	SI-3025F	HYBRID IC
	IC901	TVC80219-1E	IC
	IC902	TVR8AJ023	IC
	IC1301	M52326SP	IC
	IC1302	EY07PY2	HYBRID IC
	IC1303	LM324MX	IC
	IC1304	LM2931CMX	IC
	IC1305	LSC4330	IC
	IC1306	MB88346BPFTF	IC
	IC1307	L78M08T	IC
	IC1308	MM74HC4066MX	IC
		TRANSISTORS	
	Q11	2SK1470TD	TRANSISTOR
	Q12	2SD602R	TRANSISTOR
	Q13	2SC4080DETD	TRANSISTOR
	Q14	2SC4080DETD	TRANSISTOR
	Q15	2SA1575DETD	TRANSISTOR
	Q250	XDC114EU	TRANSISTOR
	Q251	XDA114EU	TRANSISTOR
	Q252	XDC114EU	TRANSISTOR
	Q303	2SC4081R	TRANSISTOR
	Q307	2SC3938R	TRANSISTOR
	Q308	XDC114EU	TRANSISTOR
	Q309	2SC3938R	TRANSISTOR
	Q319	2SC4620V25	TRANSISTOR
	Q331	2SA1018Q	TRANSISTOR
	Q333	XDC114EU	TRANSISTOR
	Q334	XDC114EU	TRANSISTOR
	Q401	XDC114EU	TRANSISTOR
	Q494	2SD1994AQ	TRANSISTOR
	Q495	2SB1329R	TRANSISTOR
	Q501	XDC114EU	TRANSISTOR
	Q549	2SK2015Z	TRANSISTOR
	Q550	2SC5243002FD	TRANSISTOR
	Q560	XDC114EU	TRANSISTOR
	Q561	2SK2161YB	TRANSISTOR
	Q562	XDC114EU	TRANSISTOR
	Q563	2SK2161YB	TRANSISTOR
	Q568	XDC114EU	TRANSISTOR
	Q569	XDC114EU	TRANSISTOR
	Q572	2SB1220R	TRANSISTOR
	Q573	2SD1273PLB	TRANSISTOR
	Q574	2SD1824R	TRANSISTOR
	Q575	2SB792AR	TRANSISTOR
	Q584	2SD2133S	TRANSISTOR
	Q585	2SB1413S	TRANSISTOR
	Q602	XDC114EU	TRANSISTOR
	Q672	2SC3938R	TRANSISTOR
	Q673	XDC114EU	TRANSISTOR
	Q674	2SC4212H	TRANSISTOR
	Q675	2SD1664Q	TRANSISTOR
	Q676	2SB1132Q	TRANSISTOR
	Q680	IRFI634G	TRANSISTOR
	Q682	XDC114EU	TRANSISTOR
	Q683	XDC114EU	TRANSISTOR
	Q801	2SB1414R	TRANSISTOR
	Q802	2SC1473QNC	TRANSISTOR
	Q803	2SD1819AR	TRANSISTOR
	Q809	2SC3938R	TRANSISTOR
	Q811	XDC114EU	TRANSISTOR
	Q812	XDC114EU	TRANSISTOR

Ref.No.	Part No.	Description
Q813	XDC114EU	TRANSISTOR
Q814	XDC114EU	TRANSISTOR
Q820	2SC4620V25	TRANSISTOR
Q822	2SC1473AR	TRANSISTOR
Q823	XDC114EU	TRANSISTOR
Q824	2SD1820AR	TRANSISTOR
Q825	2SB1220R	TRANSISTOR
Q891	XDA114EU	TRANSISTOR
Q901	XDA114EU	TRANSISTOR
Q903	XDC114EU	TRANSISTOR
Q1001	2SC3811R	TRANSISTOR
Q1002	2SC3811R	TRANSISTOR
Q1101	2SC3811R	TRANSISTOR
Q1102	2SC3811R	TRANSISTOR
Q1201	2SC3811R	TRANSISTOR
Q1202	2SC3811R	TRANSISTOR
Q1301	XDC114EU	TRANSISTOR
Q1302	XDC114EU	TRANSISTOR
Q1303	2SC3938R	TRANSISTOR
Q1304	XDC114EU	TRANSISTOR
	DIODES	
D11	MA152WA	DIODE
D12	MA3150M	DIODE
D13	MA174	DIODE
D201	1SS353	DIODE
D205	DTZTT115R6B	DIODE
D207	DTZTT115R1B	DIODE
D280	DTZTT115R6B	DIODE
D281	DTZTT115R6B	DIODE
D282	DTZTT115R6B	DIODE
D283	DTZTT115R6B	DIODE
D302	DTZTT119R1C	DIODE
D303	EU02Z	DIODE
D304	EU02Z	DIODE
D305	1SS353	DIODE
D306	1SS353	DIODE
D307	1SS353	DIODE
D308	1SS353	DIODE
D330	HZT33-09TD	DIODE
D331	HZT33-09TD	DIODE
D381	TAX125X103MA	VARISTOR
D382	ERZC05DK201U	VARISTOR
D383	EU02Z	DIODE
D401	EU02	DIODE
D402	MA7100A	DIODE
D404	MA1180L	DIODE
D405	1SS353	DIODE
D408	DTZTT1136B	DIODE
D497	MA30WA	DIODE
D501	1SS353	DIODE
D505	DTZTT116R2B	DIODE
D507	DTZTT114R7B	DIODE
D550	1SS353	DIODE
D551	ERA81004	DIODE
D552	RP3F014-302	DIODE
D555	FMP-3FU	DIODE
D556	1SS353	DIODE
D558	DTZTT1115C	DIODE
D560	TVSRG2A	DIODE
D561	EU02A	DIODE
D562	ERC30-02	DIODE

Ref.No.	Part No.	Description
D563	ERC30-02	DIODE
D564	EU02A	DIODE
D601	ERA34-10	DIODE
D602	ERA34-10	DIODE
D603	1SS353	DIODE
D604	EU02	DIODE
D605	1SS353	DIODE
D608	MA167	DIODE
D661	DTZTT1115C	DIODE
D667	1SS353	DIODE
D668	1SS353	DIODE
D669	1SS353	DIODE
D672	1SS353	DIODE
D674	ERA18-04	DIODE
D680	DTZTT1115C	DIODE
D681	CB903-4	DIODE
D682	DTZTT117R5C	DIODE
⚠ D801	ERZVEAV431	VARISTOR
⚠ D803	ERZVEAV431	VARISTOR
D807	EG01Z	DIODE
D808	RBV406M	DIODE
D809	1SS353	DIODE
D810	DTZTT1124B	DIODE
D817	DTZTT1118B	DIODE
D821	ERA34-10	DIODE
D841	TVSRG2A	DIODE
D842	ERC3806	DIODE
D843	TVSRG2	DIODE
D844	RL4Z	DIODE
D845	ERC30-02	DIODE
D847	DTZTT1124A	DIODE
D848	EM01Z	DIODE
D850	TVSRG2A	DIODE
D852	DTZTT116R8A	DIODE
D871	DTZTT1118B	DIODE
D891	T410-800D	DIODE
D894	ERB4408	DIODE
D902	DTZTT115R1B	DIODE
D904	RB706F40	DIODE
D905	DTZTT115R6B	DIODE
D907	DTZTT115R6B	DIODE
D912	MTZJ5R6B	DIODE
D913	DTZTT115R6B	DIODE
D914	DTZTT115R6B	DIODE
D915	DTZTT115R6B	DIODE
D940	SML1816W	DIODE(LED)
D941	DTZTT112R4B	DIODE
D946	MA142WK	DIODE
D947	DTZTT115R6B	DIODE
D948	DTZTT115R6B	DIODE
D950	DTZTT115R6B	DIODE
D951	DTZTT115R6B	DIODE
D960	DTZTT115R6B	DIODE
D961	DTZTT115R6B	DIODE
D962	DTZTT115R6B	DIODE
D963	DTZTT115R6B	DIODE
D1001	1SS353	DIODE
D1002	1SS353	DIODE
D1008	MA142WK	DIODE
D1101	1SS353	DIODE
D1102	1SS353	DIODE
D1108	MA142WK	DIODE

	Ref.No.	Part No.	Description
	D1201	1SS353	DIODE
	D1202	1SS353	DIODE
	D1208	MA142WK	DIODE
	D1302	MA29TA	DIODE
	D1303	DTZTT115R6B	DIODE
	D1304	DTZTT115R6B	DIODE
	D1305	DTZTT115R6B	DIODE
	D1306	DTZTT115R6B	DIODE
	D1307	DTZTT115R6B	DIODE
	D1311	DTZTT115R6B	DIODE
	D1401	1SS353	DIODE
	D1402	1SS353	DIODE
		COIL & TRANSFORMERS	
	L381	TSK8029	FERRITE CORE
	L383	TSK8029	FERRITE CORE
	L521	ELEY561KA	PEAKING COIL
	L561	TLUACNB2R2M	PEAKING COIL
	L570	ELC08D096D	CHOKE COIL
	L573	TLHE001	COIL
	L575	TLH85815T	COIL
	L578	TLH85819Z	COIL
	L681	TLP85709R	CHOKE COIL
⚠	L801	ELF18D656J	LINE FILTER
⚠	L802	ELF18D656J	LINE FILTER
	L805	TSK8031	FERRITE CORE
	L821	EXCELDR35C	LC COMBINATION
	L822	EXCELDR35C	LC COMBINATION
	L823	EXCELDR35C	LC COMBINATION
	L844	EXCELDR35C	LC COMBINATION
	L845	EXCELDR35C	LC COMBINATION
	L851	EXCELDR35C	LC COMBINATION
	L852	EXCELDR35C	LC COMBINATION
	L853	EXCELDR35C	LC COMBINATION
	L1002	ELEXHR33KA	PEAKING COIL
	L1101	ELEXHR22KA	PEAKING COIL
	L1102	ELEXHR33KA	PEAKING COIL
	L1202	ELEXHR33KA	PEAKING COIL
	L1301	ELEXH100KA	PEAKING COIL
	L1302	TLUACNB821K	PEAKING COIL
	L1303	TSK8029	FERRITE CORE
	L1307	ELJFA100KB	CHIP COIL
	L1308	ELEXH151KA	PEAKING COIL
	T351	TLH85906Z	TRANSFORMER
	T541	ETS22AE119AC	TRANSFORMER
⚠	T601	ETF39L86AZ	FLYBACK TRANSFORMER
⚠	T801	TLP85233R1	TRANSFORMER
		CONTROL	
	VR584	EVMEGSA00B13	CONTROL B 1K OHM
	VR801	EVMF6SA00B23	CONTROL B 2K OHM
		CAPACITORS	
	C11	ECUX1C225ZFW	C 2.2UF Z 16V
	C12	ECUX1C224KBX	C 0.22UF K 16V
	C13	ECUX1H104ZFX	C 0.1UF Z 50V
	C14	ECUX1H104ZFX	C 0.1UF Z 50V
	C16	ECUX1H561KBN	C 560PF K 50V
	C201	ECQV1H474JM	P 0.47UF J 50V
	C202	ECEA1HGE010	E 1UF 50V
	C203	ECEA1HGE010	E 1UF 50V

Ref.No.	Part No.	Description
C204	ECUX1H472KBG	C 4700PF K 50V
C205	ECUX1H103KBG	C 0.01UF K 50V
C206	ECUX1H103KBG	C 0.01UF K 50V
C207	ECEA1HGE2R2	E 2.2UF 50V
C208	ECEA1HGER47	E 0.47UF 50V
C209	ECUX1H333KBX	C 0.033UF K 50V
C210	ECUX1H102KBN	C 1000PF K 50V
C211	ECUX1H102KBN	C 1000PF K 50V
C212	ECEA1CGE101	E 100UF 16V
C213	ECUX1H102KBN	C 1000PF K 50V
C214	ECQV1H474JM	P 0.47UF J 50V
C215	ECEA1CGE101	E 100UF 16V
C280	ECUX1H103KBG	C 0.01UF K 50V
C305	ECUX1H221KBN	C 220PF K 50V
C306	ECEA1HGE100	E 10UF 50V
C309	ECUX1H103KBG	C 0.01UF K 50V
C318	ECKD2H151KB5	C 150PF K 500V
C319	ECQV1H473JM	P 0.047UF J 50V
C320	ECEA1HGE100	E 10UF 50V
C321	ECUX1H222JCX	C 2200PF J 50V
C323	ECKD3A102JBP	C 1000PF J 1KV
C326	ECEA1EGE100	E 10UF 25V
C328	ECUX1H103KBG	C 0.01UF K 50V
C339	ECQE2473KF	P 0.047UF K 200V
C372	ECEA1EGE330	E 33UF 25V
C375	ECUX1H103KBG	C 0.01UF K 50V
C376	ECUX1H103KBG	C 0.01UF K 50V
C377	ECEA1EGE100	E 10UF 25V
C378	ECEA1VGE101	E 100UF 35V
C381	ECQE2123JF	P 0.012UF J 200V
C382	ECQE2124JF	P 0.12UF J 200V
C383	ECQE2103JF	P 0.01UF J 200V
C385	ECQV1H105JM	P 1.0UF J 50V
C386	ECQE2103JF	P 0.01UF J 200V
C393	ECKD3D272KBP	C 2700PF K 2KV
C394	TCUX2H101JCM	C 100PF J 500V
C401	ECEA1HGE010	E 1UF 50V
C402	ECUX1H103KBG	C 0.01UF K 50V
C403	ECUX1H103KBG	C 0.01UF K 50V
C404	ECUX1H103KBG	C 0.01UF K 50V
C405	ECEA1CGE101	E 100UF 16V
C406	ECEA1CGE470	E 47UF 16V
C407	ECEA1EGE221	E 220UF 25V
C408	ECEA1HGE102	E 1000UF 50V
C409	ECQV1H224JM	P 0.22UF J 50V
C410	ECEA1HGE100	E 10UF 50V
C412	ECEA1VGE222	E 2200UF 35V
C413	ECEA1EGE470	E 47UF 25V
C414	ECUX1H331KBN	C 330PF K 50V
C415	ECYX1H682JCW	C 6800PF J 50V
C417	ECQV1H334JM	P 0.33UF J 50V
C418	ECUX1H104ZFX	C 0.1UF Z 50V
C419	ECUX1H104ZFX	C 0.1UF Z 50V
C421	ECUX1H683KBW	C 0.068UF K 50V
C498	ECEA1VGE101	E 100UF 35V
C502	ECEA1CGE221	E 220UF 16V
C503	ECUX1H103KBG	C 0.01UF K 50V
C504	ECEA1EGE100	E 10UF 25V
C505	ECUX1H102JCX	C 1000PF J 50V
C506	ECUX1H681JCX	C 680PF J 50V
C507	ECUX1H103KBG	C 0.01UF K 50V
C508	ECUX1C225ZFW	C 2.2UF Z 16V

Ref.No.	Part No.	Description			
C509	ECUX1H104ZFX	C	0.1UF	Z	50V
C511	ECUX1H104ZFX	C	0.1UF	Z	50V
C512	ECUX1H104ZFX	C	0.1UF	Z	50V
C513	ECUX1H102KBN	C	1000PF	K	50V
C514	ECUX1H104ZFX	C	0.1UF	Z	50V
C515	ECEA1CGN100	E	10UF		16V
C516	ECEA1HGE2R2	E	2.2UF		50V
C517	ECEA1CGE221	E	220UF		16V
C520	ECEA1EGE470	E	47UF		25V
C521	ECEA0JGE471	E	470UF		6.3V
C526	ECEA1HGE3R3	E	3.3UF		50V
C527	ECEA1HGE3R3	E	3.3UF		50V
C528	ECEA1CGE471	E	470UF		16V
C550	ECEA1VGE101	E	100UF		35V
C551	ECEA1VGE470	E	47UF		35V
C552	ECKD2H332KB5	C	3300PF	K	500V
C555	ECKD3F561JBP	C	560PF	J	3KV
C556	TAC4R6T472HC	PP	4700PF	H	1.5KV
C561	TAC7A2G274JC	PP	0.27UF	J	400V
C562	TAC7A2G105JC	PP	1UF	J	400V
C563	TAC7A2G244JC	PP	0.24UF	J	400V
C565	TAC7A2G244JC	PP	0.24UF	J	400V
C566	ECUX1H473ZFM	C	0.047UF	Z	50V
C567	ECUX1H473ZFM	C	0.047UF	Z	50V
C570	ECKC3D821JBP	C	820PF	J	2KV
C571	ECQF6272JZ	PP	2700PF	J	600V
C572	ECQE1335KF	P	3.3UF	K	100V
C573	ECKD2H102KB5	C	1000PF	K	500V
C574	ECKD2H332KB5	C	3300PF	K	500V
C576	ECUX1H103KBG	C	0.01UF	K	50V
C577	ECUX1H103KBG	C	0.01UF	K	50V
C579	ECUX1H222ZFN	C	2200PF	Z	50V
C580	ECEA1CGE470	E	47UF		16V
C581	ECQV1H684JM	P	0.68UF	J	50V
C582	ECUX1H103KBG	C	0.01UF	K	50V
C583	ECUX1C105ZFW	C	1.0UF	Z	16V
C585	ECUX1H103KBG	C	0.01UF	K	50V
C590	ECUX1H102KBN	C	1000PF	K	50V
C601	ECEA2CGE2R2	E	2.2UF		160V
C602	ECQE2474JF	P	0.47UF	J	200V
C603	ECUX1H222KBN	C	2200PF	K	50V
C604	ECEA2AGE220	E	22UF		100V
C605	ECQE10473MU	P	0.047UF	M	1KV
C606	ECEA1HGE010	E	1UF		50V
C607	ECUX1H102JCX	C	1000PF	J	50V
C608	ECKD2H102KB5	C	1000PF	K	500V
C609	ECKF1H682KB	C	6800PF	K	50V
C611	ECEA2EGE100	E	10UF		250V
C612	ECEA1EGE100	E	10UF		25V
C660	ECEA1EGE470	E	47UF		25V
C661	ECUX1H102JCX	C	1000PF	J	50V
C664	ECKD2H272KB5	C	2700PF	K	500V
C665	ECUX1H121JCG	C	120PF	J	50V
C666	ECUX1H102JCX	C	1000PF	J	50V
C667	ECUX1H221JCG	C	220PF	J	50V
C671	ECUX1C105ZFW	C	1.0UF	Z	16V
C672	ECEA1HGE4R7	E	4.7UF		50V
C674	ECEA1VGE470	E	47UF		35V
C679	ECA1JFQ120	E	12UF		63V
C681	ECEA2DGE101	E	100UF		200V
C701	ECUX1H103KBG	C	0.01UF	K	50V
C702	ECUX1H103KBG	C	0.01UF	K	50V

Ref.No.	Part No.	Description			
C703	ECUX1H103KBG	C	0.01UF	K	50V
C704	ECUX1H103KBG	C	0.01UF	K	50V
C707	ECUX1H103KBG	C	0.01UF	K	50V
C709	ECEA1EGE101	E	100UF		25V
C711	ECUX1H472KBG	C	4700PF	K	50V
C753	ECUX1H103KBG	C	0.01UF	K	50V
⚠ C801	ECQU2A105MVZ	PP	1.0UF	M	250V
⚠ C802	ECKDRS102KB	C	1000PF	K	
⚠ C803	ECKDRS102KB	C	1000PF	K	
⚠ C805	ECQU2A105MVZ	PP	1.0UF	M	250V
C814	TAC7A2G105JC	PP	1UF	J	400V
C815	ECQE4104JF	P	0.1UF	J	400V
C819	ECKD3A101KBP	C	100PF	K	1KV
C820	ECUX1H223KBX	C	0.022UF	K	50V
C821	ECQE2473KF	P	0.047UF	K	200V
C822	ECUX1H222KBN	C	2200PF	K	50V
C823	ECEA1HGE4R7	E	4.7UF		50V
C824	ECEA1HGE100	E	10UF		50V
C825	ECEA1HGE3R3	E	3.3UF		50V
C827	ECUX1H681KBN	C	680PF	K	50V
C828	ECEA1HGE470	E	47UF		50V
C829	ECEA1VGE221	E	220UF		35V
⚠ C832	ECKDRS102KB	C	1000PF	K	
⚠ C834	ECKDRS102KB	C	1000PF	K	
C839	ECEA0JGE331	E	330UF		6.3V
C840	ECEA1HGE4R7	E	4.7UF		50V
C842	ECKD3D151JBP	C	150PF	J	2KV
C844	ECA2CGE221W	E	220UF		160V
C853	ECEA1EGE100	E	10UF		25V
C854	ECQV1H224JM	P	0.22UF	J	50V
C861	ECOS2EB681CA	E	680UF		250V
C862	ECA2CGE221W	E	220UF		160V
C863	ECEA1HGE102	E	1000UF		50V
C864	ECEA1EGE332	E	3300UF		25V
C865	ECEA1CGE102	E	1000UF		16V
C866	ECEA1CGE101	E	100UF		16V
C870	ECEA1HGE101	E	100UF		50V
C871	ECEA1EGE221	E	220UF		25V
C873	ECUX1H104ZFX	C	0.1UF	Z	50V
C874	ECUX1H104ZFX	C	0.1UF	Z	50V
C876	ECEA1HGE221	E	220UF		50V
C877	ECUX1H104ZFX	C	0.1UF	Z	50V
C879	ECEA1AGE101	E	100UF		10V
C890	TACCZ335P630	P	3.3UF	K	630V
C892	ECUX1H104ZFX	C	0.1UF	Z	50V
C896	ECQE6473KF	P	0.047UF	K	600V
C901	ECUX1H220JCN	C	22PF	J	50V
C902	ECEA1AGE101	E	100UF		10V
C903	ECUX1H103KBG	C	0.01UF	K	50V
C905	ECEA1HGE010	E	1UF		50V
C906	ECUX1H103KBG	C	0.01UF	K	50V
C907	ECUX1H221KBN	C	220PF	K	50V
C908	ECUX1H150JCN	C	15PF	J	50V
C909	ECUX1H150JCN	C	15PF	J	50V
C910	ECUX1H221KBN	C	220PF	K	50V
C911	ECUX1H221KBN	C	220PF	K	50V
C912	ECUX1H333KBX	C	0.033UF	K	50V
C1001	ECEA1EGE100	E	10UF		25V
C1002	ECEA1CGE470	E	47UF		16V
C1003	ECUX1H103KBG	C	0.01UF	K	50V
C1004	ECUX1H103KBG	C	0.01UF	K	50V
C1005	ECQV1H105JM	P	1.0UF	J	50V

Ref.No.	Part No.	Description			Ref.No.	Part No.	Description		
C1006	ECUX1H111JC	C 110PF	J	50V	J014	ERDS2TC0	C 0 OHM		1/4W
C1008	ECEA2CGE220	E 22UF		160V	J015	ERDS2TC0	C 0 OHM		1/4W
C1009	ECUX1H103KBG	C 0.01UF	K	50V	J016	ERDS2TC0	C 0 OHM		1/4W
C1010	ECKD2H102KB5	C 1000PF	K	500V	J018	ERDS2TC0	C 0 OHM		1/4W
C1013	ECUX1H560JCG	C 56PF	J	50V	J022	ERDS2TC0	C 0 OHM		1/4W
C1030	ECUX1H220JCN	C 22PF	J	50V	J023	ERDS2TC0	C 0 OHM		1/4W
C1101	ECEA1EGE100	E 10UF		25V	J025	ERDS2TC0	C 0 OHM		1/4W
C1102	ECEA1CGE470	E 47UF		16V	J102	ERDS2TC0	C 0 OHM		1/4W
C1103	ECUX1H103KBG	C 0.01UF	K	50V	J103	ERDS2TC0	C 0 OHM		1/4W
C1104	ECUX1H103KBG	C 0.01UF	K	50V	J104	ERDS2TC0	C 0 OHM		1/4W
C1105	ECQV1H105JM	P 1.0UF	J	50V	J105	ERDS2TC0	C 0 OHM		1/4W
C1106	ECUX1H111JC	C 110PF	J	50V	J106	ERDS2TC0	C 0 OHM		1/4W
C1109	ECUX1H103KBG	C 0.01UF	K	50V	J114	ERDS2TC0	C 0 OHM		1/4W
C1110	ECKD2H102KB5	C 1000PF	K	500V	J201	ERD25TC0	C 0 OHM		1/4W
C1113	ECUX1H560JCG	C 56PF	J	50V	J202	ERD25TC0	C 0 OHM		1/4W
C1130	ECUX1H220JCN	C 22PF	J	50V	J203	ERD25TC0	C 0 OHM		1/4W
C1201	ECEA1EGE100	E 10UF		25V	J206	ERD25TC0	C 0 OHM		1/4W
C1202	ECEA1CGE470	E 47UF		16V	J207	ERD25TC0	C 0 OHM		1/4W
C1203	ECUX1H103KBG	C 0.01UF	K	50V	J208	ERD25TC0	C 0 OHM		1/4W
C1204	ECUX1H103KBG	C 0.01UF	K	50V	J209	ERD25TC0	C 0 OHM		1/4W
C1205	ECQV1H105JM	P 1.0UF	J	50V	J210	ERD25TC0	C 0 OHM		1/4W
C1206	ECUX1H121JCG	C 120PF	J	50V	J211	ERD25TC0	C 0 OHM		1/4W
C1207	ECEA2AGE2R2	E 2.2UF		100V	J217	ERD25TC0	C 0 OHM		1/4W
C1208	ECEA2AGE2R2	E 2.2UF		100V	J218	ERD25TC0	C 0 OHM		1/4W
C1209	ECUX1H103KBG	C 0.01UF	K	50V	J221	ERD25TC0	C 0 OHM		1/4W
C1210	ECKD2H102KB5	C 1000PF	K	500V	J222	ERD25TC0	C 0 OHM		1/4W
C1213	ECUX1H560JCG	C 56PF	J	50V	J223	ERD25TC0	C 0 OHM		1/4W
C1230	ECUX1H220JCN	C 22PF	J	50V	J224	ERD25TC0	C 0 OHM		1/4W
C1301	ECEA1HGE100	E 10UF		50V	J225	ERD25TC0	C 0 OHM		1/4W
C1302	ECUX1H103KBG	C 0.01UF	K	50V	J226	ERD25TC0	C 0 OHM		1/4W
C1303	ECEA1CGE101	E 100UF		16V	J227	ERD25TC0	C 0 OHM		1/4W
C1304	ECEA1CGE102	E 1000UF		16V	J228	ERD25TC0	C 0 OHM		1/4W
C1305	ECUX1H104ZFX	C 0.1UF	Z	50V	J229	ERD25TC0	C 0 OHM		1/4W
C1306	ECUX1C105ZFW	C 1.0UF	Z	16V	J232	ERD25TC0	C 0 OHM		1/4W
C1307	ECUX1H100DCN	C 10PF	D	50V	J235	ERD25TC0	C 0 OHM		1/4W
C1309	TACCG102P200	C 1000PF		200V	J236	ERD25TC0	C 0 OHM		1/4W
C1310	ECEA2CGE220	E 22UF		160V	J237	ERD25TC0	C 0 OHM		1/4W
C1311	ECUX1H103KBG	C 0.01UF	K	50V	J239	ERD25TC0	C 0 OHM		1/4W
C1312	ECUX1C105ZFW	C 1.0UF	Z	16V	J240	ERD25TC0	C 0 OHM		1/4W
C1314	ECEA1CGE470	E 47UF		16V	J242	ERD25TC0	C 0 OHM		1/4W
C1315	ECUX1H103KBG	C 0.01UF	K	50V	J243	ERD25TC0	C 0 OHM		1/4W
C1316	ECUX1H103KBG	C 0.01UF	K	50V	J244	ERD25TC0	C 0 OHM		1/4W
C1318	ECUX1H103KBG	C 0.01UF	K	50V	J245	ERD25TC0	C 0 OHM		1/4W
C1320	ECUX1H333KBX	C 0.033UF	K	50V	J246	ERD25TC0	C 0 OHM		1/4W
C1321	ECUX1H220JCN	C 22PF	J	50V	J247	ERD25TC0	C 0 OHM		1/4W
C1322	ECUX1H220JCN	C 22PF	J	50V	J249	ERD25TC0	C 0 OHM		1/4W
C1323	ECEA1AGE101	E 100UF		10V	J250	ERD25TC0	C 0 OHM		1/4W
C1324	ECUX1H220JCN	C 22PF	J	50V	J251	ERD25TC0	C 0 OHM		1/4W
C1325	ECEA1CGE101	E 100UF		16V	J252	ERD25TC0	C 0 OHM		1/4W
C1326	ECUX1H683KBW	C 0.068UF	K	50V	J253	ERD25TC0	C 0 OHM		1/4W
C1327	ECEA1HGE100	E 10UF		50V	J254	ERD25TC0	C 0 OHM		1/4W
C1328	ECUX1H101JCG	C 100PF	J	50V	J257	ERD25TC0	C 0 OHM		1/4W
C1329	ECUX1H103KBG	C 0.01UF	K	50V	J258	ERD25TC0	C 0 OHM		1/4W
C1410	ECUX1C105ZFW	C 1.0UF	Z	16V	J304	ERD25TC0	C 0 OHM		1/4W
C1411	ECUX1H682KBG	C 6800PF	K	50V	J305	ERD25TC0	C 0 OHM		1/4W
	RESISTORS				J306	ERD25TC0	C 0 OHM		1/4W
					J307	ERD25TC0	C 0 OHM		1/4W
J11	ERJ6GEY0R00	M 0 OHM		1/10W	J308	ERD25TC0	C 0 OHM		1/4W
J009	ERDS2TC0	C 0 OHM		1/4W	J309	ERD25TC0	C 0 OHM		1/4W
J010	ERDS2TC0	C 0 OHM		1/4W	J311	ERD25TC0	C 0 OHM		1/4W
J011	ERDS2TC0	C 0 OHM		1/4W					
J012	ERDS2TC0	C 0 OHM		1/4W	J316	ERD25TC0	C 0 OHM		1/4W
					J318	ERD25TC0	C 0 OHM		1/4W

Ref.No.	Part No.	Description			Ref.No.	Part No.	Description			
J321	ERD25TC0	C	0 OHM	1/4W	J519	ERJ8GCY0R00	M	0 OHM	1/8W	
J323	ERD25TC0	C	0 OHM	1/4W	J520	ERJ8GCY0R00	M	0 OHM	1/8W	
J324	ERD25TC0	C	0 OHM	1/4W	J522	ERJ8GCY0R00	M	0 OHM	1/8W	
J326	ERD25TC0	C	0 OHM	1/4W	J523	ERJ8GCY0R00	M	0 OHM	1/8W	
J328	ERD25TC0	C	0 OHM	1/4W	J524	ERJ8GCY0R00	M	0 OHM	1/8W	
J329	ERD25TC0	C	0 OHM	1/4W	J525	ERJ8GCY0R00	M	0 OHM	1/8W	
J330	ERD25TC0	C	0 OHM	1/4W	J526	ERJ8GCY0R00	M	0 OHM	1/8W	
J331	ERD25TC0	C	0 OHM	1/4W	J527	ERJ8GCY0R00	M	0 OHM	1/8W	
J333	ERD25TC0	C	0 OHM	1/4W	J528	ERJ8GCY0R00	M	0 OHM	1/8W	
J334	ERD25TC0	C	0 OHM	1/4W	J529	ERJ8GCY0R00	M	0 OHM	1/8W	
J335	ERD25TC0	C	0 OHM	1/4W	J530	ERJ8GCY0R00	M	0 OHM	1/8W	
J336	ERD25TC0	C	0 OHM	1/4W	J531	ERJ8GCY0R00	M	0 OHM	1/8W	
J338	ERD25TC0	C	0 OHM	1/4W	J532	ERJ8GCY0R00	M	0 OHM	1/8W	
J339	ERD25TC0	C	0 OHM	1/4W	J533	ERJ8GCY0R00	M	0 OHM	1/8W	
J340	ERD25TC0	C	0 OHM	1/4W	J534	ERJ8GCY0R00	M	0 OHM	1/8W	
J401	ERJ6GEY0R00	M	0 OHM	1/10W	J535	ERJ8GCY0R00	M	0 OHM	1/8W	
J403	ERJ6GEY0R00	M	0 OHM	1/10W	J536	ERJ8GCY0R00	M	0 OHM	1/8W	
J404	ERJ6GEY0R00	M	0 OHM	1/10W	J537	ERJ8GCY0R00	M	0 OHM	1/8W	
J405	ERJ6GEY0R00	M	0 OHM	1/10W	J538	ERJ8GCY0R00	M	0 OHM	1/8W	
J406	ERJ6GEY0R00	M	0 OHM	1/10W	J539	ERJ8GCY0R00	M	0 OHM	1/8W	
J407	ERJ6GEY0R00	M	0 OHM	1/10W	J540	ERJ8GCY0R00	M	0 OHM	1/8W	
J408	ERJ6GEY0R00	M	0 OHM	1/10W	J541	ERJ8GCY0R00	M	0 OHM	1/8W	
J409	ERJ6GEY0R00	M	0 OHM	1/10W	J542	ERJ8GCY0R00	M	0 OHM	1/8W	
J410	ERJ6GEY0R00	M	0 OHM	1/10W	J543	ERJ8GCY0R00	M	0 OHM	1/8W	
J411	ERJ6GEY0R00	M	0 OHM	1/10W	J544	ERJ8GCY0R00	M	0 OHM	1/8W	
J412	ERJ6GEY0R00	M	0 OHM	1/10W	J545	ERJ8GCY0R00	M	0 OHM	1/8W	
J414	ERJ6GEY0R00	M	0 OHM	1/10W	J546	ERJ8GCY0R00	M	0 OHM	1/8W	
J415	ERJ6GEY0R00	M	0 OHM	1/10W	J547	ERJ8GCY0R00	M	0 OHM	1/8W	
J416	ERJ6GEY0R00	M	0 OHM	1/10W	J548	ERJ8GCY0R00	M	0 OHM	1/8W	
J418	ERJ6GEY0R00	M	0 OHM	1/10W	J549	ERJ8GCY0R00	M	0 OHM	1/8W	
J419	ERJ6GEY0R00	M	0 OHM	1/10W	J550	ERJ8GCY0R00	M	0 OHM	1/8W	
J422	ERJ6GEY0R00	M	0 OHM	1/10W	J551	ERJ8GCY0R00	M	0 OHM	1/8W	
J424	ERJ6GEY0R00	M	0 OHM	1/10W	J552	ERJ8GCY0R00	M	0 OHM	1/8W	
J425	ERJ6GEY0R00	M	0 OHM	1/10W	J553	ERJ8GCY0R00	M	0 OHM	1/8W	
J426	ERJ6GEY0R00	M	0 OHM	1/10W	J554	ERJ8GCY0R00	M	0 OHM	1/8W	
J429	ERJ6GEY0R00	M	0 OHM	1/10W	J555	ERJ8GCY0R00	M	0 OHM	1/8W	
J431	ERJ6GEY0R00	M	0 OHM	1/10W	J556	ERJ8GCY0R00	M	0 OHM	1/8W	
J432	ERJ6GEY0R00	M	0 OHM	1/10W	J557	ERJ8GCY0R00	M	0 OHM	1/8W	
J434	ERJ6GEY0R00	M	0 OHM	1/10W	J558	ERJ8GCY0R00	M	0 OHM	1/8W	
J435	ERJ6GEY0R00	M	0 OHM	1/10W	J559	ERJ8GCY0R00	M	0 OHM	1/8W	
J437	ERJ6GEY0R00	M	0 OHM	1/10W	J560	ERJ8GCY0R00	M	0 OHM	1/8W	
J440	ERJ6GEY0R00	M	0 OHM	1/10W	J561	ERJ8GCY0R00	M	0 OHM	1/8W	
J441	ERJ6GEY0R00	M	0 OHM	1/10W	J562	ERJ8GCY0R00	M	0 OHM	1/8W	
J442	ERJ6GEY0R00	M	0 OHM	1/10W	J563	ERJ8GCY0R00	M	0 OHM	1/8W	
J501	ERJ8GCY0R00	M	0 OHM	1/8W	J565	ERJ8GCY0R00	M	0 OHM	1/8W	
J502	ERJ8GCY0R00	M	0 OHM	1/8W	J567	ERJ8GCY0R00	M	0 OHM	1/8W	
J503	ERJ8GCY0R00	M	0 OHM	1/8W	J568	ERJ8GCY0R00	M	0 OHM	1/8W	
J504	ERJ8GCY0R00	M	0 OHM	1/8W	J569	ERJ8GCY0R00	M	0 OHM	1/8W	
J505	ERJ8GCY0R00	M	0 OHM	1/8W	J572	ERJ8GCY0R00	M	0 OHM	1/8W	
J506	ERJ8GCY0R00	M	0 OHM	1/8W	J573	ERJ8GCY0R00	M	0 OHM	1/8W	
J507	ERJ8GCY0R00	M	0 OHM	1/8W	J580	ERJ8GCY0R00	M	0 OHM	1/8W	
J508	ERJ8GCY0R00	M	0 OHM	1/8W	J1301	ERD25TC0	C	0 OHM	1/4W	
J509	ERJ8GCY0R00	M	0 OHM	1/8W	L1001	ERDS2TC0	C	0 OHM	1/4W	
J510	ERJ8GCY0R00	M	0 OHM	1/8W	L1003	ERJ8GCY0R00	M	0 OHM	1/8W	
J511	ERJ8GCY0R00	M	0 OHM	1/8W	L1103	ERDS2TC0	C	0 OHM	1/4W	
J512	ERJ8GCY0R00	M	0 OHM	1/8W	L1103	ERJ8GCY0R00	M	0 OHM	1/8W	
J513	ERJ8GCY0R00	M	0 OHM	1/8W	L1201	ERDS2TC0	C	0 OHM	1/4W	
J514	ERJ8GCY0R00	M	0 OHM	1/8W	L1203	ERJ8GCY0R00	M	0 OHM	1/8W	
J515	ERJ8GCY0R00	M	0 OHM	1/8W	R11	ERJ6ENF1002	M	10K OHM	F	1/10W
J516	ERJ8GCY0R00	M	0 OHM	1/8W	R12	ERJ6ENF4703	M	470K OHM	F	1/10W
J517	ERJ8GCY0R00	M	0 OHM	1/8W	R13	ERJ6ENF1802	M	18K OHM	F	1/10W
J518	ERJ8GCY0R00	M	0 OHM	1/8W	R14	ERJ6ENF3301	M	3.3K OHM	F	1/10W

Ref.No.	Part No.	Description				Ref.No.	Part No.	Description			
R15	TAR101D0183H	M	18K	OHM	J 1W	R337	ERJ6GEYJ103	M	10K	OHM	J 1/10W
R16	ERJ6ENF6800	M	680	OHM	F 1/10W	R346	ERJ6ENF3832	M	38.3K	OHM	F 1/10W
R17	ERJ6ENF8450	M	845	OHM	F 1/10W	R347	ERJ6ENF3922	M	39.2K	OHM	F 1/10W
R18	TAR101D0273H	M	27K	OHM	J 1W	R348	ERJ6ENF1213	M	121K	OHM	F 1/10W
R19	ERJ6ENF4702	M	47K	OHM	F 1/10W	R363	ERDS1FJ151	C	150	OHM	J 1/2W
R20	ERJ6ENF4702	M	47K	OHM	F 1/10W	R371	ERJ6ENF1622	M	16.2K	OHM	F 1/10W
R22	ERJ6GEY0R00	M	0	OHM	1/10W	R372	ERJ6ENF1002	M	10K	OHM	F 1/10W
R23	ERJ6GEYJ105	M	1M	OHM	J 1/10W	R373	ERJ6ENF7681	M	7.68K	OHM	F 1/10W
R24	ERJ6ENF4703	M	470K	OHM	F 1/10W	R374	ERJ6GEYJ103	M	10K	OHM	J 1/10W
R25	ERJ6ENF1000	M	100	OHM	F 1/10W	R375	ERJ6GEYJ472	M	4.7K	OHM	J 1/10W
R26	ERJ6GEYJ470	M	47	OHM	J 1/10W	R376	ERJ6ENF5622	M	56.2K	OHM	F 1/10W
R203	ERJ6GEYJ102	M	1K	OHM	J 1/10W	R377	ERJ6ENF1102	M	11K	OHM	F 1/10W
R204	ERJ6GEYJ272	M	2.7K	OHM	J 1/10W	R378	ERJ6ENF1213	M	121K	OHM	F 1/10W
R205	ERJ6GEYJ106	M	10M	OHM	J 1/10W	R379	ERJ6ENF1782	M	17.8K	OHM	F 1/10W
R206	ERJ6GEYJ472	M	4.7K	OHM	J 1/10W	R380	ERDS2TJ121	C	120	OHM	J 1/4W
R207	ERJ6GEYJ472	M	4.7K	OHM	J 1/10W	R381	ERJ6GEYJ102	M	1K	OHM	J 1/10W
R208	ERJ6GEYJ472	M	4.7K	OHM	J 1/10W	R390	ERJ8GCY0R00	M	0	OHM	1/8W
R212	ERJ6GEYJ182	M	1.8K	OHM	J 1/10W	R391	ERJ8GCY0R00	M	0	OHM	1/8W
R214	ERJ6GEYJ472	M	4.7K	OHM	J 1/10W	R392	ERJ8GCY0R00	M	0	OHM	1/8W
R215	ERJ6GEYJ102	M	1K	OHM	J 1/10W	R393	ERJ8GCY0R00	M	0	OHM	1/8W
R217	ERJ6GEYJ222	M	2.2K	OHM	J 1/10W	R400	ERD25FJ472K	C	4.7K	OHM	J 1/4W
R218	ERJ6GEYJ562	M	5.6K	OHM	J 1/10W	R401	ERJ6GEYJ470	M	47	OHM	J 1/10W
R219	ERDS1FJ391	C	390	OHM	J 1/2W	R403	ERJ6ENF8252	M	82.5K	OHM	F 1/10W
R220	ERDS1FJ331	C	330	OHM	J 1/2W	R405	ERQ14AJ220	F	22	OHM	J 1/4W
R221	ERJ6GEYJ222	M	2.2K	OHM	J 1/10W	R407	ERJ6GEYJ103	M	10K	OHM	J 1/10W
R223	ERJ6GEYJ102	M	1K	OHM	J 1/10W	R408	ERJ6ENF5621	M	5.62K	OHM	F 1/10W
R224	ERJ6ENF2702	M	27K	OHM	F 1/10W	R409	ERJ8ENF1822	M	18.2K	OHM	F 1/8W
R225	ERJ6ENF2433	M	243K	OHM	F 1/10W	R410	ERJ6ENF3651	M	3.65K	OHM	F 1/10W
R247	ERJ6GEYJ101	M	100	OHM	J 1/10W	R411	ERJ6ENF2741	M	2.74K	OHM	F 1/10W
R248	ERJ6GEYJ101	M	100	OHM	J 1/10W	R412	ERJ6ENF8251	M	8.25K	OHM	F 1/10W
R249	ERJ6GEYJ101	M	100	OHM	J 1/10W	R413	ERJ6ENF2211	M	2.21K	OHM	F 1/10W
R250	ERJ6GEYJ392	M	3.9K	OHM	J 1/10W	R414	ERJ6ENF1961	M	1.96K	OHM	F 1/10W
R251	ERJ6GEYJ562	M	5.6K	OHM	J 1/10W	R415	ERDS2TJ472	C	4.7K	OHM	J 1/4W
R252	ERJ6GEYJ102	M	1K	OHM	J 1/10W	R416	ERJ6GEYJ122	M	1.2K	OHM	J 1/10W
R281	ERJ8ENF3010	M	301	OHM	F 1/8W	R417	ERDS2TJ472	C	4.7K	OHM	J 1/4W
R282	ERJ8ENF3010	M	301	OHM	F 1/8W	R418	ERDS2CKF2151	M	2.15K	OHM	F 1/4W
R283	ERJ6GEYJ473	M	47K	OHM	J 1/10W	R419	ERJ8GCYJ272	M	2.7K	OHM	J 1/8W
R285	ERJ8ENF3010	M	301	OHM	F 1/8W	R422	ERG1SJ331	M	330	OHM	J 1W
R287	ERJ8GCYJ122	M	1.2K	OHM	J 1/8W	R423	ERX2SJR82	M	0.82	OHM	J 2W
R288	ERJ8GCYJ122	M	1.2K	OHM	J 1/8W	R424	ERDS1FJ392	C	3.9K	OHM	J 1/2W
R295	ERDS1FJ103	C	10K	OHM	J 1/2W	R425	ERJ8GCY0R00	M	0	OHM	1/8W
R301	ERJ6GEYJ472	M	4.7K	OHM	J 1/10W	R426	ERDS2CKF4421	M	4.42K	OHM	F 1/4W
R302	ERJ6GEYJ152	M	1.5K	OHM	J 1/10W	R427	ERDS2TJ1R5	C	1.5	OHM	J 1/4W
R303	ERJ6GEYJ223	M	22K	OHM	J 1/10W	R428	ERJ6GEYJ472	M	4.7K	OHM	J 1/10W
R304	ERJ6GEYJ102	M	1K	OHM	J 1/10W	R429	ERQ1CJP4R7S	F	4.7	OHM	J 1W
R305	ERJ6ENF3402	M	34K	OHM	F 1/10W	R431	ERJ6GEYJ472	M	4.7K	OHM	J 1/10W
R306	ERJ6ENF2003	M	200K	OHM	F 1/10W	R493	ERG2SJ680	M	68	OHM	J 2W
R307	ERDS1FJ681	C	680	OHM	J 1/2W	R494	ERD25FJ3R3K	C	3.3	OHM	J 1/4W
R308	ERJ6GEYJ153	M	15K	OHM	J 1/10W	R495	ERD25FJ3R3K	C	3.3	OHM	J 1/4W
R309	ERJ6GEYJ472	M	4.7K	OHM	J 1/10W	R496	ERG3FJ680	M	68	OHM	J 3W
R310	ERJ8GCYJ102	M	1K	OHM	J 1/8W	R497	ERDS2TJ332	C	3.3K	OHM	J 1/4W
R311	ERJ6GEYJ153	M	15K	OHM	J 1/10W	R498	ERG3FJ470	M	47	OHM	J 3W
R313	ERJ6GEYJ472	M	4.7K	OHM	J 1/10W	R500	ERJ6ENF4221	M	4.22K	OHM	F 1/10W
R316	ERDS1FJ274	C	270K	OHM	J 1/2W	R502	ERJ6ENF5111	M	5.11K	OHM	F 1/10W
R317	ERDS1FJ274	C	270K	OHM	J 1/2W	R503	ERJ6GEYJ332	M	3.3K	OHM	J 1/10W
R318	ERDS2TJ224	C	220K	OHM	J 1/4W	R504	ERJ6GEYJ272	M	2.7K	OHM	J 1/10W
R319	ERJ6GEYJ821	M	820	OHM	J 1/10W	R506	ERJ6GEYJ103	M	10K	OHM	J 1/10W
R320	ERJ8GCYJ822	M	8.2K	OHM	J 1/8W	R507	ERJ6GEY0R00	M	0	OHM	1/10W
R321	ERDS1FJ153	C	15K	OHM	J 1/2W	R508	ERD25FJ392K	C	3.9K	OHM	J 1/4W
R322	ERDS2TJ102	C	1K	OHM	J 1/4W	R510	ERJ6GEY0R00	M	0	OHM	1/10W
R334	ERDS1FJ274	C	270K	OHM	J 1/2W	R516	ERJ6GEYJ332	M	3.3K	OHM	J 1/10W
R336	ERDS1FJ125	C	1.2M	OHM	J 1/2W	R526	ERJ6ENF2211	M	2.21K	OHM	F 1/10W

Ref.No.	Part No.	Description				Ref.No.	Part No.	Description			
R527	ERJ6GEYJ222	M	2.2K	OHM	J 1/10W	R613	ERJ12YJ564	M	560K	OHM	J 1/2W
R528	ERJ6ENF8200	M	820	OHM	F 1/10W	R614	ERJ12YJ184	M	180K	OHM	J 1/2W
R534	ERD25FJ103K	C	10K	OHM	J 1/4W	R615	ERJ6GEYJ392	M	3.9K	OHM	J 1/10W
R535	ERX1SJR22	M	0.22	OHM	J 1W	R616	ERJ6GEYJ123	M	12K	OHM	J 1/10W
R536	ERD25FJ103K	C	10K	OHM	J 1/4W	R617	ERJ6ENF3091	M	3.09K	OHM	F 1/10W
R537	ERJ6ENF5600	M	560	OHM	F 1/10W	R618	ERJ12YJ105	M	1M	OHM	J 1/2W
R538	ERJ6ENF1433	M	143K	OHM	F 1/10W	R620	ERJ8GCYJ474	M	470K	OHM	J 1/8W
R540	ERJ12YJ101	M	100	OHM	J 1/2W	R621	ERDS2TJ125	C	1.2M	OHM	J 1/4W
R541	ERJ6GEYJ683	M	68K	OHM	J 1/10W	R622	ERJ6GEYJ223	M	22K	OHM	J 1/10W
R542	ERJ6ENF3241	M	3.24K	OHM	F 1/10W	R623	ERJ8ENF1102	M	11K	OHM	F 1/8W
R543	ERJ6GEYJ563	M	56K	OHM	J 1/10W	R624	EROS2CKF1211	M	1.21K	OHM	F 1/4W
R544	ERJ8ENF1332	M	13.3K	OHM	F 1/8W	R625	ERJ6ENF2211	M	2.21K	OHM	F 1/10W
R545	TARRS5B820J2	M	82	OHM	J 5W	R627	ERJ6GEYJ102	M	1K	OHM	J 1/10W
R546	TARRS5B561J2	M	560	OHM	J 5W	R628	ERJ6GEYJ105	M	1M	OHM	J 1/10W
R547	ERJ6GEYJ470	M	47	OHM	J 1/10W	R629	ERJ6GEYJ101	M	100	OHM	J 1/10W
R548	ERJ6GEYJ332	M	3.3K	OHM	J 1/10W	R630	ERJ6GEYJ102	M	1K	OHM	J 1/10W
R549	ERG1SJ561	M	560	OHM	J 1W	R631	ERJ6GEYJ123	M	12K	OHM	J 1/10W
R550	ERQ12AJR12HK	F	0.12	OHM	J 1/2W	R632	ERJ6GEYJ103	M	10K	OHM	J 1/10W
R551	ERX2SJ1R5	M	1.5	OHM	J 2W	R643	ERJ6GEY0R00	M	0	OHM	1/10W
R552	ERX2SJ1R8	M	1.8	OHM	J 2W	R644	ERJ6GEYJ102	M	1K	OHM	J 1/10W
R553	ERJ6GEYJ103	M	10K	OHM	J 1/10W	R645	ERJ8GCYJ222	M	2.2K	OHM	J 1/8W
R554	ERX3FJX6R8D	M	6.8	OHM	J 3W	R648	ERJ6GEYJ102	M	1K	OHM	J 1/10W
R555	ERD25FJ103K	C	10K	OHM	J 1/4W	R650	ERJ6GEYJ471	M	470	OHM	J 1/10W
R556	ERJ6GEYJ332	M	3.3K	OHM	J 1/10W	R660	ERJ8ENF5110	M	511	OHM	F 1/8W
R557	ERJ6GEYJ103	M	10K	OHM	J 1/10W	R661	ERJ6GEYJ823	M	82K	OHM	J 1/10W
R558	ERJ6GEYJ103	M	10K	OHM	J 1/10W	R662	ERJ6GEYJ102	M	1K	OHM	J 1/10W
R559	ERJ6GEYJ102	M	1K	OHM	J 1/10W	R663	ERJ6GEYJ103	M	10K	OHM	J 1/10W
R560	ERDS1FJ472	C	4.7K	OHM	J 1/2W	R664	ERJ8GCYJ103	M	10K	OHM	J 1/8W
R561	ERJ6GEYJ100	M	10	OHM	J 1/10W	R665	ERJ6GEYJ103	M	10K	OHM	J 1/10W
R562	ERJ6GEYJ472	M	4.7K	OHM	J 1/10W	R666	ERJ6GEYJ562	M	5.6K	OHM	J 1/10W
R564	ERJ6GEYJ100	M	10	OHM	J 1/10W	R667	ERJ6GEYJ222	M	2.2K	OHM	J 1/10W
R565	ERDS1FJ472	C	4.7K	OHM	J 1/2W	R668	ERJ8GCYJ104	M	100K	OHM	J 1/8W
R566	ERJ8GCYJ472	M	4.7K	OHM	J 1/8W	R669	ERJ6GEYJ392	M	3.9K	OHM	J 1/10W
R575	ERDS1FJ221	C	220	OHM	J 1/2W	R670	ERDS1FJ104	C	100K	OHM	J 1/2W
R576	ERJ6ENF1622	M	16.2K	OHM	F 1/10W	R671	ERJ6GEYJ562	M	5.6K	OHM	J 1/10W
R577	ERJ6ENF4121	M	4.12K	OHM	F 1/10W	R672	ERJ6GEYJ102	M	1K	OHM	J 1/10W
R578	ERJ6GEYJ102	M	1K	OHM	J 1/10W	R674	ERDS1FJ391	C	390	OHM	J 1/2W
R581	ERD25FJ470K	C	47	OHM	J 1/4W	R675	ERQ14AJ101	F	100	OHM	J 1/4W
R585	ERDS2TJ101	C	100	OHM	J 1/4W	R676	ERQ14AJ101	F	100	OHM	J 1/4W
R586	ERDS2TJ101	C	100	OHM	J 1/4W	R678	ERDS1FJ220	C	22	OHM	J 1/2W
R587	ERDS2TJ332	C	3.3K	OHM	J 1/4W	R679	ERJ6GEYJ104	M	100K	OHM	J 1/10W
R588	TARRS5B150J2	M	15	OHM	J 5W	R680	ERJ6GEYJ104	M	100K	OHM	J 1/10W
R589	TARRS5B150J2	M	15	OHM	J 5W	R682	ERJ6GEYJ101	M	100	OHM	J 1/10W
R590	ERJ6ENF2491	M	2.49K	OHM	F 1/10W	R683	ERJ6GEYJ822	M	8.2K	OHM	J 1/10W
R591	ERJ6GEYJ272	M	2.7K	OHM	J 1/10W	R701	ERJ6GEYJ392	M	3.9K	OHM	J 1/10W
R592	ERJ6GEYJ103	M	10K	OHM	J 1/10W	R702	ERJ6GEYJ392	M	3.9K	OHM	J 1/10W
R593	ERG2SG393	M	39K	OHM	G 2W	R703	ERJ6GEYJ103	M	10K	OHM	J 1/10W
R594	ERDS2TJ121	C	120	OHM	J 1/4W	R715	ERJ6GEYJ392	M	3.9K	OHM	J 1/10W
R595	ERDS1FJ1R8	C	1.8	OHM	J 1/2W	R719	ERJ6GEYJ392	M	3.9K	OHM	J 1/10W
R596	ERJ6GEYJ332	M	3.3K	OHM	J 1/10W	R721	ERJ6GEYJ102	M	1K	OHM	J 1/10W
R598	ERJ6GEY0R00	M	0	OHM	1/10W	R724	ERJ6GEYJ102	M	1K	OHM	J 1/10W
R601	ERQ12AJ101	F	100	OHM	J 1/2W	R801	ERC12AGK394	S	390K	OHM	K 1/2W
R602	ERQ14AJ100	F	10	OHM	J 1/4W	R802	ERJ6GEYJ273	M	27K	OHM	J 1/10W
R603	ERJ8GCY0R00	M	0	OHM	1/8W	R804	ERJ8GCYJ471	M	470	OHM	J 1/8W
R605	ERD25FJ100K	C	10	OHM	J 1/4W	R805	ERJ6GEYJ102	M	1K	OHM	J 1/10W
R606	ERDS1FJ184	C	180K	OHM	J 1/2W	R807	ERJ8GCYJ562	M	5.6K	OHM	J 1/8W
R607	ERDS1FJ184	C	180K	OHM	J 1/2W	R808	ERJ6GEYJ471	M	470	OHM	J 1/10W
R608	ERDS1FJ184	C	180K	OHM	J 1/2W	R809	ERDS1FJ223	C	22K	OHM	J 1/2W
R609	ERDS1FJ184	C	180K	OHM	J 1/2W	R810	ERJ6GEYJ391	M	390	OHM	J 1/10W
R610	ERDS1FJ184	C	180K	OHM	J 1/2W	R811	ERDS1FJ224	C	220K	OHM	J 1/2W
R611	ERG1SJ683	M	68K	OHM	J 1W	R812	ERDS1FJ274	C	270K	OHM	J 1/2W
R612	ERJ12YJ274	M	270K	OHM	J 1/2W	R813	ERJ6GEYJ152	M	1.5K	OHM	J 1/10W

Ref.No.	Part No.	Description				Ref.No.	Part No.	Description			
R814	ERJ6GEYJ151	M	150	OHM	J 1/10W	R904	ERJ8GCY0R00	M	0	OHM	1/8W
R815	ERJ6GEYJ681	M	680	OHM	J 1/10W	R905	ERJ8GCY0R00	M	0	OHM	1/8W
R816	ERJ6ENF2551	M	2.55K	OHM	F 1/10W	R906	ERJ8GCYJ103	M	10K	OHM	J 1/8W
R817	ERQ12AJ6R8	F	6.8	OHM	J 1/2W	R907	ERJ6GEYJ104	M	100K	OHM	J 1/10W
R818	ERJ6GEY0R00	M	0	OHM	1/10W	R908	ERJ8GCYJ102	M	1K	OHM	J 1/8W
R819	ERDS2TJ224	C	220K	OHM	J 1/4W	R909	ERJ8GCYJ103	M	10K	OHM	J 1/8W
R820	ERDS2TJ224	C	220K	OHM	J 1/4W	R910	ERJ8GCYJ563	M	56K	OHM	J 1/8W
R821	TARRS3B333J2	M	33K	OHM	J 3W	R911	ERJ8GCYJ563	M	56K	OHM	J 1/8W
R822	ERJ6GEYJ182	M	1.8K	OHM	J 1/10W	R912	ERJ8GCYJ563	M	56K	OHM	J 1/8W
R823	ERJ6GEYJ102	M	1K	OHM	J 1/10W	R913	ERJ8GCYJ563	M	56K	OHM	J 1/8W
R824	ERJ8GCYJ681	M	680	OHM	J 1/8W	R914	ERJ6GEYJ563	M	56K	OHM	J 1/10W
R825	ERJ6GEYJ821	M	820	OHM	J 1/10W	R915	ERJ6GEYJ563	M	56K	OHM	J 1/10W
R829	ERJ6GEYJ102	M	1K	OHM	J 1/10W	R916	ERJ6GEYJ563	M	56K	OHM	J 1/10W
R833	ERJ6GEYJ102	M	1K	OHM	J 1/10W	R918	ERJ6GEYJ101	M	100	OHM	J 1/10W
R834	ERW2PKR12	W	0.12	OHM	K 2W	R919	ERJ8GCY0R00	M	0	OHM	1/8W
R836	ERG2SJ223	M	22K	OHM	J 2W	R923	ERDS2TJ103	C	10K	OHM	J 1/4W
R837	ERG2SJ223	M	22K	OHM	J 2W	R930	ERJ8GCYJ103	M	10K	OHM	J 1/8W
R838	ERJ6GEYJ102	M	1K	OHM	J 1/10W	R931	ERJ8GCYJ103	M	10K	OHM	J 1/8W
R839	ERDS1FJ223	C	22K	OHM	J 1/2W	R932	ERJ6GEYJ101	M	100	OHM	J 1/10W
R841	ERQ12AJR33HK	F	0.33	OHM	J 1/2W	R933	ERJ6GEYJ101	M	100	OHM	J 1/10W
R842	ERQ12HJ1R2	F	1.2	OHM	J 1/2W	R937	ERJ6GEYJ102	M	1K	OHM	J 1/10W
R843	ERQ12AJR12HK	F	0.12	OHM	J 1/2W	R940	ERJ6GEYJ223	M	22K	OHM	J 1/10W
R844	ERQ12AJR12HK	F	0.12	OHM	J 1/2W	R941	ERJ6GEYJ223	M	22K	OHM	J 1/10W
R845	TAR18BK0R11Z	F	0.11	OHM	K 1/4W	R943	ERJ6GEYJ103	M	10K	OHM	J 1/10W
R846	ERDS1FJ221	C	220	OHM	J 1/2W	R946	ERJ6GEYJ101	M	100	OHM	J 1/10W
R847	ERJ12YJ122	M	1.2K	OHM	J 1/2W	R947	ERJ6GEYJ331	M	330	OHM	J 1/10W
R849	ERJ6GEYJ473	M	47K	OHM	J 1/10W	R949	ERJ8GCYJ223	M	22K	OHM	J 1/8W
R850	ER025CKF2201	M	2.2K	OHM	F 1/4W	R950	ERJ8GCYJ223	M	22K	OHM	J 1/8W
R851	ERQ14AJ010HK	F	1	OHM	J 1/4W	R951	ERJ6GEYJ223	M	22K	OHM	J 1/10W
R852	ERJ6GEYJ103	M	10K	OHM	J 1/10W	R952	ERJ6GEYJ223	M	22K	OHM	J 1/10W
R854	ERG3FJ330	M	33	OHM	J 3W	R962	ERJ6GEYJ103	M	10K	OHM	J 1/10W
R855	ERJ6ENF2101	M	2.1K	OHM	F 1/10W	R963	ERJ6GEYJ103	M	10K	OHM	J 1/10W
R857	ERJ6GEYJ683	M	68K	OHM	J 1/10W	R969	ERJ6GEYJ334	M	330K	OHM	J 1/10W
R858	ERDS1FJ222	C	2.2K	OHM	J 1/2W	R970	ERJ6GEYJ334	M	330K	OHM	J 1/10W
R859	ERDS1FJ222	C	2.2K	OHM	J 1/2W	R971	ERJ6GEYJ334	M	330K	OHM	J 1/10W
R860	ERJ6GEYJ103	M	10K	OHM	J 1/10W	R973	ERJ8GCYJ103	M	10K	OHM	J 1/8W
R862	ERJ6ENF1302	M	13K	OHM	F 1/10W	R974	ERJ8GCYJ103	M	10K	OHM	J 1/8W
R863	ERDS1FJ332	C	3.3K	OHM	J 1/2W	R975	ERJ8GCYJ103	M	10K	OHM	J 1/8W
R864	ERG2SJ223	M	22K	OHM	J 2W	R977	ERJ6GEYJ223	M	22K	OHM	J 1/10W
R865	ERJ6GEY0R00	M	0	OHM	1/10W	R978	ERJ6GEYJ392	M	3.9K	OHM	J 1/10W
R867	ERJ6ENF3741	M	3.74K	OHM	F 1/10W	R979	ERJ6GEYJ392	M	3.9K	OHM	J 1/10W
R868	ERJ6ENF6651	M	6.65K	OHM	F 1/10W	R980	ERJ6GEYJ273	M	27K	OHM	J 1/10W
R869	ERJ6ENF4221	M	4.22K	OHM	F 1/10W	R981	ERJ6GEYJ333	M	33K	OHM	J 1/10W
R871	ERJ12YJ104	M	100K	OHM	J 1/2W	R982	ERJ6GEYJ101	M	100	OHM	J 1/10W
R872	ERJ12YJ104	M	100K	OHM	J 1/2W	R983	ERJ6GEYJ101	M	100	OHM	J 1/10W
R875	ERDS1FJ224	C	220K	OHM	J 1/2W	R984	ERJ6GEYJ101	M	100	OHM	J 1/10W
R887	ER0S2CKF6801	M	6.8K	OHM	F 1/4W	R985	ERJ6GEYJ101	M	100	OHM	J 1/10W
R888	ERJ8GCYJ472	M	4.7K	OHM	J 1/8W	R986	ERDS2TJ331	C	330	OHM	J 1/4W
R889	ERDS1FJ683	C	68K	OHM	J 1/2W	R993	ERJ6GEY0R00	M	0	OHM	1/10W
R890	ERX3FJX1R6D	M	1.6	OHM	J 3W	R1002	ERJ8ENF75R0	M	75	OHM	F 1/8W
R891	ERDS1FJ224	C	220K	OHM	J 1/2W	R1004	ERJ6GEYJ330	M	33	OHM	J 1/10W
R892	ERDS1FJ334	C	330K	OHM	J 1/2W	R1005	ERJ6GEY0R00	M	0	OHM	1/10W
R893	ERDS1FJ334	C	330K	OHM	J 1/2W	R1007	ERJ6ENF29R4	M	29.4	OHM	F 1/10W
R895	ERJ6GEYJ102	M	1K	OHM	J 1/10W	R1008	ERJ6ENF7320	M	732	OHM	F 1/10W
R896	ERJ6GEYJ102	M	1K	OHM	J 1/10W	R1009	ERJ6ENF3900	M	390	OHM	F 1/10W
R897	ERDS1FJ334	C	330K	OHM	J 1/2W	R1010	ERJ6ENF5600	M	560	OHM	F 1/10W
R898	ERDS1FJ470	C	47	OHM	J 1/2W	R1011	ERJ6GEYJ300	M	30	OHM	J 1/10W
R899	ERDS1FJ224	C	220K	OHM	J 1/2W	R1012	ERDS2TJ101	C	100	OHM	J 1/4W
R900	ERDS1FJ334	C	330K	OHM	J 1/2W	R1013	ER025CKF4702	M	47K	OHM	F 1/4W
R901	ERJ6GEYJ103	M	10K	OHM	J 1/10W	R1014	ER0S2CKF3091	M	3.09K	OHM	F 1/4W
R902	ERJ6GEYJ682	M	6.8K	OHM	J 1/10W	R1015	ERJ6ENF6811	M	6.81K	OHM	F 1/10W
R903	ERJ6GEYJ102	M	1K	OHM	J 1/10W	R1018	ERDS1FJ820	C	82	OHM	J 1/2W

Ref.No.	Part No.	Description
R1019	ERG2SJ123	M 12K OHM J 2W
R1020	ERJ6ENF1002	M 10K OHM F 1/10W
R1021	ERJ6ENF1002	M 10K OHM F 1/10W
R1022	ERDS1FJ220	C 22 OHM J 1/2W
R1023	ERDS2TJ102	C 1K OHM J 1/4W
R1024	ERJ6GEYJ822	M 8.2K OHM J 1/10W
R1025	ERJ6ENF1202	M 12K OHM F 1/10W
R1026	ERDS2CKF2262	M 22.6K OHM F 1/4W
R1027	ERJ6ENF1002	M 10K OHM F 1/10W
R1028	ERJ6GEYJ472	M 4.7K OHM J 1/10W
R1030	ERJ6GEY0R00	M 0 OHM 1/10W
R1102	ERJ8ENF75R0	M 75 OHM F 1/8W
R1104	ERJ6GEYJ330	M 33 OHM J 1/10W
R1107	ERJ6ENF23R7	M 23.7 OHM F 1/10W
R1108	ERJ6ENF7320	M 732 OHM F 1/10W
R1109	ERJ6ENF3900	M 390 OHM F 1/10W
R1110	ERJ6ENF5600	M 560 OHM F 1/10W
R1111	ERJ6GEYJ390	M 39 OHM J 1/10W
R1112	ERDS1FJ820	C 82 OHM J 1/2W
R1113	ERO25CKF4702	M 47K OHM F 1/4W
R1114	ERDS2CKF3091	M 3.09K OHM F 1/4W
R1115	ERJ6ENF6811	M 6.81K OHM F 1/10W
R1118	ERDS1FJ820	C 82 OHM J 1/2W
R1119	ERG2SJ123	M 12K OHM J 2W
R1120	ERJ6ENF1002	M 10K OHM F 1/10W
R1121	ERJ6ENF1002	M 10K OHM F 1/10W
R1122	ERDS1FJ220	C 22 OHM J 1/2W
R1123	ERDS2TJ102	C 1K OHM J 1/4W
R1124	ERJ6GEYJ822	M 8.2K OHM J 1/10W
R1125	ERJ6ENF1202	M 12K OHM F 1/10W
R1126	ERDS2CKF2262	M 22.6K OHM F 1/4W
R1127	ERJ6ENF1002	M 10K OHM F 1/10W
R1128	ERJ6GEYJ472	M 4.7K OHM J 1/10W
R1130	ERJ6GEY0R00	M 0 OHM 1/10W
R1131	ERJ8GCYJ330	M 33 OHM J 1/8W
R1202	ERJ8ENF75R0	M 75 OHM F 1/8W
R1204	ERJ6GEYJ330	M 33 OHM J 1/10W
R1205	ERJ6GEYJ682	M 6.8K OHM J 1/10W
R1207	ERJ6ENF66R5	M 66.5 OHM F 1/10W
R1208	ERJ6ENF7320	M 732 OHM F 1/10W
R1209	ERJ6ENF3900	M 390 OHM F 1/10W
R1210	ERJ6ENF5600	M 560 OHM F 1/10W
R1211	ERJ6GEYJ220	M 22 OHM J 1/10W
R1212	ERDS2TJ331	C 330 OHM J 1/4W
R1213	ERO25CKF4702	M 47K OHM F 1/4W
R1214	ERDS2CKF3091	M 3.09K OHM F 1/4W
R1215	ERJ6ENF6811	M 6.81K OHM F 1/10W
R1218	ERDS1FJ820	C 82 OHM J 1/2W
R1219	ERG2SJ123	M 12K OHM J 2W
R1220	ERJ6ENF1002	M 10K OHM F 1/10W
R1221	ERJ6ENF1002	M 10K OHM F 1/10W
R1222	ERDS1FJ220	C 22 OHM J 1/2W
R1223	ERDS2TJ102	C 1K OHM J 1/4W
R1224	ERJ6GEYJ822	M 8.2K OHM J 1/10W
R1225	ERJ6ENF1202	M 12K OHM F 1/10W
R1226	ERDS2CKF2262	M 22.6K OHM F 1/4W
R1227	ERJ6ENF1002	M 10K OHM F 1/10W
R1228	ERJ6GEYJ472	M 4.7K OHM J 1/10W
R1230	ERJ6GEY0R00	M 0 OHM 1/10W
R1301	ERJ6GEYJ472	M 4.7K OHM J 1/10W
R1302	ERJ6GEYJ102	M 1K OHM J 1/10W
R1303	ERJ6GEYJ753	M 75K OHM J 1/10W

Ref.No.	Part No.	Description
R1305	ERJ6ENF1002	M 10K OHM F 1/10W
R1306	ERJ6ENF1002	M 10K OHM F 1/10W
R1307	ERJ6GEYJ271	M 270 OHM J 1/10W
R1308	ERJ6GEYJ102	M 1K OHM J 1/10W
R1312	ERJ6GEYJ102	M 1K OHM J 1/10W
R1313	ERJ6GEYJ102	M 1K OHM J 1/10W
R1314	ERJ6GEYJ331	M 330 OHM J 1/10W
R1315	ERJ6GEYJ474	M 470K OHM J 1/10W
R1316	ERJ6GEYJ222	M 2.2K OHM J 1/10W
R1317	ERJ6ENF9101	M 9.1K OHM F 1/10W
R1318	ERJ6GEYJ682	M 6.8K OHM J 1/10W
R1320	ERJ6ENF2701	M 2.7K OHM F 1/10W
R1322	ERJ6GEYJ100	M 10 OHM J 1/10W
R1324	ERJ6GEYJ103	M 10K OHM J 1/10W
R1325	ERJ6GEYJ223	M 22K OHM J 1/10W
R1326	ERJ6GEYJ223	M 22K OHM J 1/10W
R1327	ERJ6GEYJ103	M 10K OHM J 1/10W
R1328	ERJ6GEYJ102	M 1K OHM J 1/10W
R1329	ERJ6GEYJ102	M 1K OHM J 1/10W
R1330	ERJ6ENF8251	M 8.25K OHM F 1/10W
R1331	ERJ6ENF1502	M 15K OHM F 1/10W
R1332	ERJ6ENF1002	M 10K OHM F 1/10W
R1333	ERJ8GCYJ681	M 680 OHM J 1/8W
R1334	ERJ6GEYJ101	M 100 OHM J 1/10W
R1335	ERJ12YJ102	M 1K OHM J 1/2W
R1336	ERJ6GEYJ102	M 1K OHM J 1/10W
R1337	ERJ6GEYJ101	M 100 OHM J 1/10W
R1338	ERJ6GEYJ101	M 100 OHM J 1/10W
R1339	ERJ6GEYJ101	M 100 OHM J 1/10W
R1401	ERJ6GEYJ331	M 330 OHM J 1/10W
R1402	ERJ6ENF2702	M 27K OHM F 1/10W
R1403	ERJ6ENF3301	M 3.3K OHM F 1/10W
R1404	ERJ6ENF2212	M 22.1K OHM F 1/10W
R1405	ERJ6ENF5621	M 5.62K OHM F 1/10W
R1408	ERJ6ENF1002	M 10K OHM F 1/10W
R1409	ERJ6ENF1002	M 10K OHM F 1/10W
R1410	ERJ6GEYJ124	M 120K OHM J 1/10W
R1411	ERJ6GEYJ101	M 100 OHM J 1/10W

OTHERS

	TMKK001	TAPE
	TMK87907	MICA SHEET
	TUC87574	AC INLET BRACKET
	XTV3+12J	SCREW
	XTV3+16J	SCREW
	XWGT40660	WASHER
	XWG3F10	WASHER
⚠ F801	XBA2C31TB15L	FUSE(3.15A)
FG1	TJE85318	LUG TERMINAL
FG2	TJC85341	EARTH LUG
FG3	TJC85341	EARTH LUG
FG4	TJC85341	EARTH LUG
FG6	TJC85341	EARTH LUG
FS801	TJC85502T	FUSE HOLDER
FS803	TJC85502T	FUSE HOLDER
JC101	TJC85341	EARTH LUG
JC102	TJC85341	EARTH LUG
N7A	TJS9A8730	10P CONNECTOR
N7B	TJS9A8730	10P CONNECTOR
N11	TJSF00602	2P CONNECTOR
N12	TJSF00603	3P CONNECTOR
N12A	TJS9A8740	22P CONNECTOR

	Ref.No.	Part No.	Description		Ref.No.	Part No.	Description
	N12B	TJS9A8740	22P CONNECTOR				
	N13	TJSF00604	4P CONNECTOR				
	N103	TJS8A9880	15P CONNECTOR				
	N104A	EMCS0364M	3P CONNECTOR				
	N104B	-TXAJTV3P1663	3P CONNECTOR ASSY				
	N106	TJC85342T	LUG TERMINAL				
	N107A	EMCS0251ML	2P CONNECTOR(L-TYPE)				
	N381	TJS1A5280	CRT SOCKET				
⚠	N801	TJS8A9361	AC SOCKET				
	N901	EMCS0451ML	4P CONNECTOR(L-TYPE)				
	N510-1	TEL302-9	TERMINAL				
	N510-2	TEL302-9	TERMINAL				
	N510-3	TEL302-9	TERMINAL				
	N510-4	TEL302-9	TERMINAL				
	N802-1	TEL302-9	TERMINAL				
	N802-2	TEL302-9	TERMINAL				
⚠	PC830	PC123FY8	PHOTO COUPLER				
⚠	PC831	PC123FY8	PHOTO COUPLER				
⚠	PC832	TLP750D4	PHOTO COUPLER				
	S290	TAG10003	SPARK GAP				
	S301	TGPS152GL	SPARK GAP				
	S601	TAGDSP201MB	SPARK GAP				
	S1001	TAGDSP141TTA	SPARK GAP				
	S1101	TAGDSP141TTA	SPARK GAP				
	S1201	TAGDSP141TTA	SPARK GAP				
⚠	SW801	ESB91231A	SWITCH(POWER)				
	SW901	EVQPB005K	SWITCH				
	SW902	EVQPB005K	SWITCH				
	SW903	EVQPB005K	SWITCH				
	SW904	EVQPB005K	SWITCH				
	TP1	TEL302-9	TERMINAL				
	TP2	TEL302-9	TERMINAL				
	TP3	TEL302-9	TERMINAL				
	TP4	TEL302-9	TERMINAL				
	TP5	TEL302-9	TERMINAL				
	X901	TSS2165TM	CRYSTAL OSCILLATOR				

Printed in Japan
07/95 1200 (N)